User's manual
FLIR T8xx series

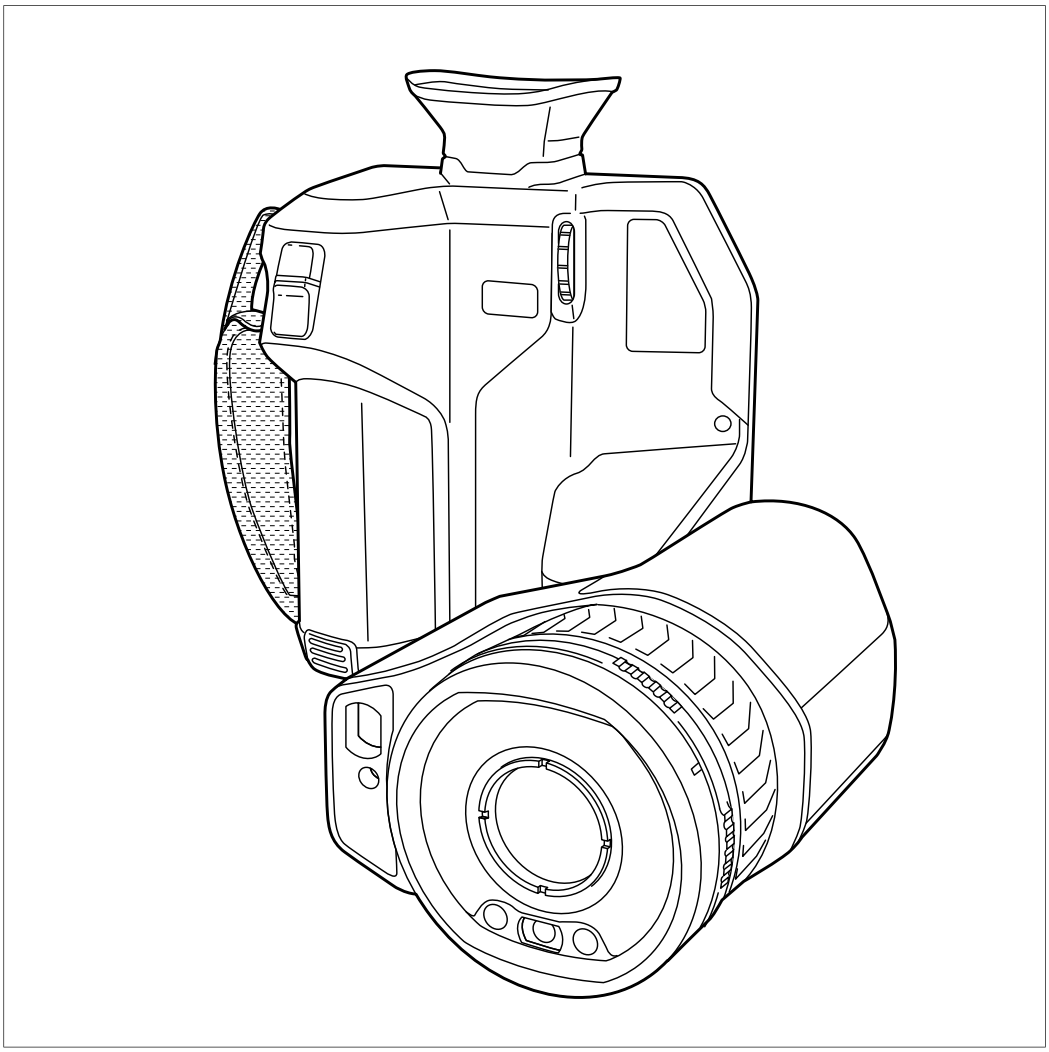

User's manual
FLIR T8xx series

Table of contents

1 Disclaimers ... 1
1.1 Legal disclaimer ... 1
1.2 Usage statistics ... 1
1.3 U.S. Government Regulations ... 1
1.4 Copyright ... 1
1.5 Quality assurance ... 1
1.6 Patents ... 1
1.7 EULA Terms ... 1
1.8 EULA Terms ... 1
2 Safety information ... 2
3 Notice to user ... 6
3.1 Calibration ... 6
3.2 Accuracy ... 6
3.3 Disposal of electronic waste ... 6
3.4 Training ... 6
3.5 Documentation updates ... 6
3.6 Important note about this manual ... 7
3.7 Note about authoritative versions ... 7
4 Customer help ... 8
4.1 General ... 8
4.2 Submitting a question ... 8
4.3 Downloads ... 8
5 Quick start guide ... 9
5.1 Procedure ... 9
5.2 To keep in mind ... 9
6 Register the camera ... 10
6.1 General ... 10
6.2 Procedure ... 10
7 A note about ergonomics ... 15
7.1 General ... 15
7.2 Figure ... 15
8 Camera parts ... 16
8.1 View from the rear ... 16
8.1.1 Figure ... 16
8.1.2 Explanation ... 16
8.2 View from the front ... 17
8.2.1 Figure ... 17
8.2.2 Explanation ... 17
8.3 View from the bottom ... 18
8.3.1 Figure ... 18
8.3.2 Explanation ... 18
8.4 Laser distance meter and laser pointer ... 18
8.4.1 General ... 18
8.4.2 Laser transmitter and receiver ... 19
8.4.3 Difference in position ... 19
8.4.4 Laser warning label ... 20
8.4.5 Laser rules and regulations ... 20
8.5 Viewfinder and display ... 20

9 Screen elements 21
9.1 General 21
9.2 Menu system 21
9.3 Soft buttons 22
9.4 Status icons and indicators 23
9.5 Swipe-down menu 23
9.6 Image overlay information 23
10 Navigating the menu system 25
10.1 General 25
10.2 Navigating using the navigation pad 25
11 Handling the camera 26
11.1 Charging the battery 26
11.1.1 General 26
11.1.2 Using the stand-alone battery charger to charge the battery 26
11.1.3 Using the USB battery charger to charge the battery when it is inside the camera 26
11.1.4 Charging the battery using a USB cable connected to a computer 27
11.2 Installing and removing the camera battery 27
11.2.1 Installing the battery 27
11.2.2 Removing the battery 28
11.3 Turning on and turning off the camera 28
11.4 Adjusting the viewfinder's dioptric correction (sharpness) 29
11.5 Adjusting the angle of lens 30
11.5.1 Figure 30
11.5.2 Procedure 30
11.6 Adjusting the infrared camera focus manually 31
11.6.1 Figure 31
11.6.2 Procedure 31
11.7 Autofocusing the infrared camera 31
11.7.1 General 31
11.7.2 Figure 32
11.7.3 Procedure 32
11.8 Continuous autofocus 32
11.8.1 General 32
11.8.2 Procedure 33
11.9 Operating the laser distance meter 33
11.9.1 General 33
11.9.2 Procedure 34
11.10 Measuring areas 34
11.10.1 General 34
11.10.2 Procedure 35
11.11 Connecting external devices and storage media 35
11.11.1 General 35
11.11.2 Figure 35
11.11.3 Explanation 35
11.12 Moving files to a computer 36
11.12.1 General 36
11.12.2 Procedure 36
11.13 Assigning functions to the programmable buttons 37

11.13.1 General ... 37
11.13.2 Procedure ... 38
11.14 Using the camera lamp as a flash ... 38
11.14.1 General ... 38
11.14.2 Procedure ... 38
11.15 Changing camera lenses ... 39
11.16 Calibrating the lens–camera combination ... 42
11.16.1 Introduction ... 42
11.16.2 AutoCal procedure ... 43
11.17 Neck strap ... 45
11.18 Hand strap ... 45

12 Saving and working with images ... 47

12.1 About image files ... 47
12.1.1 General ... 47
12.1.2 File-naming convention ... 47
12.1.3 Storage capacity ... 47
12.1.4 About UltraMax ... 47
12.2 Saving an image ... 48
12.2.1 General ... 48
12.2.2 Procedure ... 48
12.3 Previewing an image ... 49
12.3.1 General ... 49
12.3.2 Procedure ... 49
12.4 Opening a saved image ... 49
12.4.1 General ... 49
12.4.2 Procedure ... 49
12.5 Editing a saved image ... 50
12.5.1 General ... 50
12.5.2 Procedure ... 50
12.5.3 Related topics ... 50
12.6 Displaying the image information ... 50
12.6.1 General ... 50
12.6.2 Procedure ... 50
12.7 Zooming an image ... 51
12.7.1 General ... 51
12.7.2 Procedure ... 51
12.8 Deleting images ... 51
12.9 Resetting the image counter ... 51
12.9.1 General ... 51
12.9.2 Procedure ... 52

13 Working with the image archive ... 53

13.1 General ... 53
13.1.1 Managing folders via soft button ... 53
13.2 Opening image and video files ... 54
13.3 Creating a new folder ... 54
13.4 Renaming a folder ... 54
13.5 Changing the active folder ... 54
13.5.1 General ... 54
13.5.2 Procedure ... 55
13.6 Moving files between folders ... 55

13.7 Deleting a folder 55
13.8 Deleting an image or video file 56
13.8.1 General 56
13.8.2 Procedure 56
13.9 Deleting multiple files 56
13.9.1 General 56
13.9.2 Procedure 56
13.10 Deleting all files 57
13.10.1 General 57
13.10.2 Procedure 57
14 Achieving a good image 58
14.1 General 58
14.2 Adjusting the infrared camera focus 58
14.2.1 Manual focus 58
14.2.2 Autofocus 58
14.2.3 Continuous autofocus 58
14.3 Adjusting the infrared image 59
14.3.1 General 59
14.3.2 Manual adjustment by touching the screen 60
14.3.3 Manual adjustment by using the navigation pad 61
14.3.4 Manual adjustment in *Level, Span* mode 62
14.3.5 Manual adjustment in *Level, Max, Min* mode 62
14.4 Changing the camera temperature range 62
14.4.1 General 62
14.4.2 Procedure 62
14.5 Changing the color palettes 63
14.5.1 General 63
14.5.2 Procedure 64
14.6 Changing the measurement parameters 64
14.7 Performing a non-uniformity correction (NUC) 65
14.7.1 General 65
14.7.2 Performing an NUC manually 65
14.8 Hiding all overlay 65
14.8.1 General 65
15 Working with image modes 67
15.1 General 67
15.2 Image examples 67
15.3 Selecting an image mode 69
16 Working with measurement tools 71
16.1 General 71
16.2 Adding/removing measurement tools 71
16.3 Editing user presets 71
16.3.1 General 71
16.3.2 Procedure 72
16.4 Moving and resizing a measurement tool 72
16.4.1 General 72
16.4.2 Moving a spot 72
16.4.3 Moving and resizing a box or circle tool 73
16.5 Changing the measurement parameters 73
16.5.1 General 73

16.5.2 Types of parameters ... 73
16.5.3 Recommended values ... 74
16.5.4 Procedure ... 74
16.5.5 Related topics ... 76
16.6 Displaying values in the result table ... 76
16.6.1 General ... 76
16.6.2 Procedure ... 76
16.7 Creating and setting up a difference calculation ... 77
16.7.1 General ... 77
16.7.2 Procedure ... 77
16.8 Setting a measurement alarm ... 78
16.8.1 General ... 78
16.8.2 Types of alarm ... 78
16.8.3 Alarm signals ... 78
16.8.4 Procedure ... 78
17 Working with color alarms and isotherms ... 81
17.1 Color alarms ... 81
17.1.1 General ... 81
17.1.2 Image examples ... 81
17.1.3 Setting up above, below, and interval alarms ... 82
17.1.4 Building isotherms ... 83
18 Annotating images ... 85
18.1 General ... 85
18.2 Adding a note ... 85
18.2.1 General ... 85
18.2.2 Procedure ... 85
18.3 Adding a text comment table ... 86
18.3.1 General ... 86
18.3.2 Procedure ... 86
18.3.3 Creating a text comment table template ... 87
18.4 Adding a voice annotation ... 89
18.4.1 General ... 89
18.4.2 Procedure ... 89
18.5 Adding a sketch ... 90
18.5.1 General ... 90
18.5.2 Procedure ... 90
19 Programming the camera (time-lapse) ... 92
19.1 General ... 92
19.2 Procedure ... 92
20 Recording video clips ... 93
20.1 General ... 93
20.2 Procedure ... 93
20.3 Playing a saved video clip ... 93
21 Screening alarm ... 95
21.1 General ... 95
21.2 Procedure ... 95
22 Pairing Bluetooth devices ... 97
22.1 General ... 97
22.2 Procedure ... 97

23 Configuring Wi-Fi ... 98
23.1 General ... 98
23.2 Setting up a wireless access point (most common use) ... 98
23.3 Connecting the camera to a WLAN (less common use) ... 98
24 Fetching data from external FLIR meters ... 99
24.1 General ... 99
24.2 Technical support for external meters ... 99
24.3 Procedure ... 100
24.4 Typical moisture measurement and documentation procedure ... 100
24.4.1 General ... 100
24.4.2 Procedure ... 100
24.5 More information ... 101
25 Changing settings ... 102
25.1 General ... 102
25.1.1 *Connections* ... 102
25.1.2 *Camera temperature range* ... 102
25.1.3 *Save options & storage* ... 102
25.1.4 *Device settings* ... 103
26 Cleaning the camera ... 106
26.1 Camera housing, cables, and other items ... 106
26.1.1 Liquids ... 106
26.1.2 Equipment ... 106
26.1.3 Procedure ... 106
26.2 Infrared lens ... 106
26.2.1 Liquids ... 106
26.2.2 Equipment ... 106
26.2.3 Procedure ... 106
26.3 Infrared detector ... 107
26.3.1 General ... 107
26.3.2 Procedure ... 107
27 Technical data ... 108
27.1 Online field-of-view calculator ... 108
27.2 Note about technical data ... 108
27.3 Note about authoritative versions ... 108
27.4 FLIR T830 14° ... 109
27.5 FLIR T830 24° ... 115
27.6 FLIR T830 24° + 14° ... 121
27.7 FLIR T830 24° + 14° & 42° ... 127
27.8 FLIR T830 24° + 42° ... 134
27.9 FLIR T830 42° ... 140
27.10 FLIR T830 42°+ 14° ... 146
27.11 FLIR T840 14° ... 152
27.12 FLIR T840 24° ... 158
27.13 FLIR T840 24° + 14° ... 164
27.14 FLIR T840 24° + 14° & 42° ... 170
27.15 FLIR T840 24° + 42° ... 177
27.16 FLIR T840 42° ... 183
27.17 FLIR T840 42° + 14° ... 189

28 Mechanical drawings 195
29 CE Declaration of conformity 199
30 Application examples 201
30.1 Moisture & water damage 201
30.1.1 General 201
30.1.2 Figure 201
30.2 Faulty contact in socket 201
30.2.1 General 201
30.2.2 Figure 202
30.3 Oxidized socket 202
30.3.1 General 202
30.3.2 Figure 202
30.4 Insulation deficiencies 203
30.4.1 General 203
30.4.2 Figure 203
30.5 Draft 204
30.5.1 General 204
30.5.2 Figure 204
31 About FLIR Systems 206
31.1 More than just an infrared camera 207
31.2 Sharing our knowledge 208
31.3 Supporting our customers 208
32 Terms, laws, and definitions 209
33 Thermographic measurement techniques 211
33.1 Introduction 211
33.2 Emissivity 211
33.2.1 Finding the emissivity of a sample 211
33.3 Reflected apparent temperature 215
33.4 Distance 215
33.5 Relative humidity 215
33.6 Other parameters 215
34 The secret to a good thermal image 216
34.1 Introduction 216
34.2 Background 216
34.3 A good image 216
34.4 The three unchangeables—the basis for a good image 217
34.4.1 Focus 217
34.4.2 Temperature range 218
34.4.3 Image detail and distance from the object 219
34.5 The changeables—image optimization and temperature measurement 220
34.5.1 Level and span 220
34.5.2 Palettes and isotherms 220
34.5.3 Object parameters 221
34.6 Taking images—practical tips 221
34.7 Conclusion 222
35 About calibration 223
35.1 Introduction 223
35.2 Definition—what is calibration? 223
35.3 Camera calibration at FLIR Systems 223

35.4 The differences between a calibration performed by a user and that performed directly at FLIR Systems 224
35.5 Calibration, verification and adjustment 224
35.6 Non-uniformity correction 225
35.7 Thermal image adjustment (thermal tuning) 225

36 History of infrared technology 226

37 Theory of thermography 229
37.1 Introduction 229
37.2 The electromagnetic spectrum 229
37.3 Blackbody radiation 230
37.3.1 Planck’s law 231
37.3.2 Wien’s displacement law 232
37.3.3 Stefan-Boltzmann's law 233
37.3.4 Non-blackbody emitters 234
37.4 Infrared semi-transparent materials 236

38 The measurement formula 237

39 Emissivity tables 241
39.1 References 241
39.2 Tables 241

1 Disclaimers

1.1 Legal disclaimer

For warranty terms, please refer to https://www.flir.com/warranty.

1.2 Usage statistics

FLIR Systems reserves the right to gather anonymous usage statistics to help maintain and improve the quality of our software and services.

1.3 U.S. Government Regulations

This product may be subject to U.S. Export Regulations. Please send any inquiries to exportquestions@flir.com.

1.4 Copyright

© 2019, FLIR Systems, Inc. All rights reserved worldwide. No parts of the software including source code may be reproduced, transmitted, transcribed or translated into any language or computer language in any form or by any means, electronic, magnetic, optical, manual or otherwise, without the prior written permission of FLIR Systems.

The documentation must not, in whole or part, be copied, photocopied, reproduced, translated or transmitted to any electronic medium or machine readable form without prior consent, in writing, from FLIR Systems.

Names and marks appearing on the products herein are either registered trademarks or trademarks of FLIR Systems and/or its subsidiaries. All other trademarks, trade names or company names referenced herein are used for identification only and are the property of their respective owners.

1.5 Quality assurance

The Quality Management System under which these products are developed and manufactured has been certified in accordance with the ISO 9001 standard.

FLIR Systems is committed to a policy of continuous development; therefore we reserve the right to make changes and improvements on any of the products without prior notice.

1.6 Patents

This product is protected by patents, design patents, patents pending, or design patents pending. Please refer to the FLIR Systems' patent registry: https://www.flir.com/patentnotices.

1.7 EULA Terms

Qt4 Core and Qt4 GUI, Copyright ©2013 Nokia Corporation and FLIR Systems AB. This Qt library is a free software; you can redistribute it and/or modify it under the terms of the GNU Lesser General Public License as published by the Free Software Foundation; either version 2.1 of the License, or (at your option) any later version. This library is distributed in the hope that it will be useful, but WITHOUT ANY WARRANTY; without even the implied warranty of MERCHANTABILITY or FITNESS FOR A PARTICULAR PURPOSE. See the GNU Lesser General Public License, http://www.gnu.org/licenses/lgpl-2.1.html. The source code for the libraries Qt4 Core and Qt4 GUI may be requested from FLIR Systems AB.

1.8 EULA Terms

- You have acquired a device ("INFRARED CAMERA") that includes software licensed by FLIR Systems AB from Microsoft Licensing, GP or its affiliates ("MS"). Those installed software products of MS origin, as well as associated media, printed materials, and "online" or electronic documentation ("SOFTWARE") are protected by international intellectual property laws and treaties. The SOFTWARE is licensed, not sold. All rights reserved.
- IF YOU DO NOT AGREE TO THIS END USER LICENSE AGREEMENT ("EULA"), DO NOT USE THE DEVICE OR COPY THE SOFTWARE. INSTEAD, PROMPTLY CONTACT FLIR Systems AB FOR INSTRUCTIONS ON RETURN OF THE UNUSED DEVICE(S) FOR A REFUND. **ANY USE OF THE SOFTWARE, INCLUDING BUT NOT LIMITED TO USE ON THE DEVICE, WILL CONSTITUTE YOUR AGREEMENT TO THIS EULA (OR RATIFICATION OF ANY PREVIOUS CONSENT).**
- **GRANT OF SOFTWARE LICENSE.** This EULA grants you the following license:
  - You may use the SOFTWARE only on the DEVICE.
  - **NOT FAULT TOLERANT.** THE SOFTWARE IS NOT FAULT TOLERANT. FLIR Systems AB HAS INDEPENDENTLY DETERMINED HOW TO USE THE SOFTWARE IN THE DEVICE, AND MS HAS RELIED UPON FLIR Systems AB TO CONDUCT SUFFICIENT TESTING TO DETERMINE THAT THE SOFTWARE IS SUITABLE FOR SUCH USE.
  - **NO WARRANTIES FOR THE SOFTWARE.** THE SOFTWARE is provided "AS IS" and with all faults. THE ENTIRE RISK AS TO SATISFACTORY QUALITY, PERFORMANCE, ACCURACY, AND EFFORT (INCLUDING LACK OF NEGLIGENCE) IS WITH YOU. ALSO, THERE IS NO WARRANTY AGAINST INTERFERENCE WITH YOUR ENJOYMENT OF THE SOFTWARE OR AGAINST INFRINGEMENT. **IF YOU HAVE RECEIVED ANY WARRANTIES REGARDING THE DEVICE OR THE SOFTWARE, THOSE WARRANTIES DO NOT ORIGINATE FROM, AND ARE NOT BINDING ON, MS.**
  - No Liability for Certain Damages. **EXCEPT AS PROHIBITED BY LAW, MS SHALL HAVE NO LIABILITY FOR ANY INDIRECT, SPECIAL, CONSEQUENTIAL OR INCIDENTAL DAMAGES ARISING FROM OR IN CONNECTION WITH THE USE OR PERFORMANCE OF THE SOFTWARE. THIS LIMITATION SHALL APPLY EVEN IF ANY REMEDY FAILS OF ITS ESSENTIAL PURPOSE. IN NO EVENT SHALL MS BE LIABLE FOR ANY AMOUNT IN EXCESS OF U.S. TWO HUNDRED FIFTY DOLLARS (U.S.$250.00).**
  - **Limitations on Reverse Engineering, Decompilation, and Disassembly.** You may not reverse engineer, decompile, or disassemble the SOFTWARE, except and only to the extent that such activity is expressly permitted by applicable law notwithstanding this limitation.
  - **SOFTWARE TRANSFER ALLOWED BUT WITH RESTRICTIONS.** You may permanently transfer rights under this EULA only as part of a permanent sale or transfer of the Device, and only if the recipient agrees to this EULA. If the SOFTWARE is an upgrade, any transfer must also include all prior versions of the SOFTWARE.
  - **EXPORT RESTRICTIONS.** You acknowledge that SOFTWARE is subject to U.S. export jurisdiction. You agree to comply with all applicable international and national laws that apply to the SOFTWARE, including the U.S. Export Administration Regulations, as well as end-user, end-use and destination restrictions issued by U.S. and other governments. For additional information see http://www.microsoft.com/exporting/.

2 Safety information

WARNING

Applicability: Class B digital devices.

This equipment has been tested and found to comply with the limits for a Class B digital device, pursuant to Part 15 of the FCC Rules. These limits are designed to provide reasonable protection against harmful interference in a residential installation. This equipment generates, uses and can radiate radio frequency energy and, if not installed and used in accordance with the instructions, may cause harmful interference to radio communications. However, there is no guarantee that interference will not occur in a particular installation. If this equipment does cause harmful interference to radio or television reception, which can be determined by turning the equipment off and on, the user is encouraged to try to correct the interference by one or more of the following measures:

- Reorient or relocate the receiving antenna.
- Increase the separation between the equipment and receiver.
- Connect the equipment into an outlet on a circuit different from that to which the receiver is connected.
- Consult the dealer or an experienced radio/TV technician for help.

WARNING

Applicability: Digital devices subject to 15.19/RSS-210.

NOTICE: This device complies with Part 15 of the FCC Rules and with RSS-210 of Industry Canada. Operation is subject to the following two conditions:

1. this device may not cause harmful interference, and
2. this device must accept any interference received, including interference that may cause undesired operation.

WARNING

Applicability: Digital devices subject to 15.21.

NOTICE: Changes or modifications made to this equipment not expressly approved by FLIR Systems may void the FCC authorization to operate this equipment.

WARNING

Applicability: Digital devices subject to 2.1091/2.1093/OET Bulletin 65.

Radiofrequency radiation exposure Information: The radiated output power of the device is below the FCC/IC radio frequency exposure limits. Nevertheless, the device shall be used in such a manner that the potential for human contact during normal operation is minimized.

WARNING

Do not look directly into the laser beam. The laser beam can cause eye irritation.

WARNING

Do not point the camera at the face of a person when the continuous autofocus function is on. The camera uses laser distance measurements (that are continuous) for the focus adjustments. The laser beam can cause eye irritation.

WARNING

Do not point the camera at the face of a person when you use the autofocus function. You can set the camera to use a laser distance measurement for the focus adjustment. The laser beam can cause eye irritation.

WARNING

Do not disassemble or do a modification to the battery. The battery contains safety and protection devices which, if damage occurs, can cause the battery to become hot, or cause an explosion or an ignition.

WARNING

If there is a leak from the battery and you get the fluid in your eyes, do not rub your eyes. Flush well with water and immediately get medical care. The battery fluid can cause injury to your eyes if you do not do this.

WARNING

Do not continue to charge the battery if it does not become charged in the specified charging time. If you continue to charge the battery, it can become hot and cause an explosion or ignition. Injury to persons can occur.

WARNING

Only use the correct equipment to remove the electrical power from the battery. If you do not use the correct equipment, you can decrease the performance or the life cycle of the battery. If you do not use the correct equipment, an incorrect flow of current to the battery can occur. This can cause the battery to become hot, or cause an explosion. Injury to persons can occur.

WARNING

Make sure that you read all applicable MSDS (Material Safety Data Sheets) and warning labels on containers before you use a liquid. The liquids can be dangerous. Injury to persons can occur.

CAUTION

Do not point the infrared camera (with or without the lens cover) at strong energy sources, for example, devices that cause laser radiation, or the sun. This can have an unwanted effect on the accuracy of the camera. It can also cause damage to the detector in the camera.

CAUTION

Do not use the camera in temperatures more than +50°C (+122°F), unless other information is specified in the user documentation or technical data. High temperatures can cause damage to the camera.

CAUTION

Do not attach the batteries directly to a car's cigarette lighter socket, unless FLIR Systems supplies a specific adapter to connect the batteries to a cigarette lighter socket. Damage to the batteries can occur.

CAUTION

Do not connect the positive terminal and the negative terminal of the battery to each other with a metal object (such as wire). Damage to the batteries can occur.

CAUTION

Do not get water or salt water on the battery, or permit the battery to become wet. Damage to the batteries can occur.

CAUTION

Do not make holes in the battery with objects. Damage to the battery can occur.

CAUTION

Do not hit or cause shocks to the battery. Damage to the battery can occur.

CAUTION

Do not put the batteries in or near a fire, or into direct sunlight. When the battery becomes hot, the built-in safety equipment becomes energized and can stop the battery charging procedure. If the battery becomes hot, damage can occur to the safety equipment and this can cause more heat, damage or ignition of the battery.

CAUTION

Do not put the battery on or near fires, stoves, or other high-temperature locations. Damage to the battery and injury to persons can occur.

CAUTION

Do not solder directly onto the battery. Damage to the battery can occur.

CAUTION

Do not use the battery if, when you use, charge, or put the battery in storage, there is an unusual smell from the battery, the battery feels hot, changes color, changes shape, or is in an unusual condition. Speak with your sales office if one or more of these problems occurs. Damage to the battery and injury to persons can occur.

CAUTION

Only use a specified battery charger when you charge the battery. Damage to the battery can occur if you do not do this.

CAUTION

Only use a specified battery for the camera. Damage to the camera and the battery can occur if you do not do this.

CAUTION

The temperature range through which you can charge the battery is ±0°C to +45°C (+32°F to +113°F), except for the Korean market where the approved range is +10°C to + 45°C (+50°F to +113°F). If you charge the battery at temperatures out of this range, it can cause the battery to become hot or to break. It can also decrease the performance or the life cycle of the battery.

CAUTION

The temperature range through which you can remove the electrical power from the battery is -15°C to +50°C (+5°F to +122°F), unless other information is specified in the user documentation or technical data. If you operate the battery out of this temperature range, it can decrease the performance or the life cycle of the battery.

CAUTION

When the battery is worn, apply insulation to the terminals with adhesive tape or equivalent materials before you discard it. Damage to the battery and injury to persons can occur if you do not do this.

CAUTION

Remove any water or moisture on the battery before you install it. Damage to the battery can occur if you do not do this.

CAUTION

Do not apply solvents or equivalent liquids to the camera, the cables, or other items. Damage to the battery and injury to persons can occur.

CAUTION

Be careful when you clean the infrared lens. The lens has an anti-reflective coating which is easily damaged. Damage to the infrared lens can occur.

CAUTION

Do not use too much force to clean the infrared lens. This can cause damage to the anti-reflective coating.

CAUTION

Make sure that the beams from the intensive energy sources do not go into the viewfinder. The beams can cause damage to the camera. This includes the devices that emit laser radiation, or the sun.

Note The encapsulation rating is only applicable when all the openings on the camera are sealed with their correct covers, hatches, or caps. This includes the compartments for data storage, batteries, and connectors.

3 Notice to user

3.1 Calibration

We recommend that you send in the camera for calibration once a year. Contact your local sales office for instructions on where to send the camera.

3.2 Accuracy

For very accurate results, we recommend that you wait 5 minutes after you have started the camera before measuring a temperature.

3.3 Disposal of electronic waste

Electrical and electronic equipment (EEE) contains materials, components and substances that may be hazardous and present a risk to human health and the environment when waste electrical and electronic equipment (WEEE) is not handled correctly.

Equipment marked with the below crossed-out wheeled bin is electrical and electronic equipment. The crossed-out wheeled bin symbol indicates that waste electrical and electronic equipment should not be discarded together with unseparated household waste, but must be collected separately.

For this purpose all local authorities have established collection schemes under which residents can dispose waste electrical and electronic equipment at a recycling centre or other collection points, or WEEE will be collected directly from households. More detailed information is available from the technical administration of the relevant local authority.

3.4 Training

To read about infrared training, visit:

- http://www.infraredtraining.com
- http://www.irtraining.com
- http://www.irtraining.eu

3.5 Documentation updates

Our manuals are updated several times per year, and we also issue product-critical notifications of changes on a regular basis.

To access the latest manuals, translations of manuals, and notifications, go to the Download tab at:

http://support.flir.com

It only takes a few minutes to register online. In the download area you will also find the latest releases of manuals for our other products, as well as manuals for our historical and obsolete products.

3.6 Important note about this manual

FLIR Systems issues generic manuals that cover several cameras within a model line.

This means that this manual may contain descriptions and explanations that do not apply to your particular camera model.

3.7 Note about authoritative versions

The authoritative version of this publication is English. In the event of divergences due to translation errors, the English text has precedence.

Any late changes are first implemented in English.

4 Customer help

4.1 General

For customer help, visit:

http://support.flir.com

4.2 Submitting a question

To submit a question to the customer help team, you must be a registered user. It only takes a few minutes to register online. If you only want to search the knowledgebase for existing questions and answers, you do not need to be a registered user.

When you want to submit a question, make sure that you have the following information to hand:

- The camera model
- The camera serial number
- The communication protocol, or method, between the camera and your device (for example, SD card reader, HDMI, Ethernet, USB, or FireWire)
- Device type (PC/Mac/iPhone/iPad/Android device, etc.)
- Version of any programs from FLIR Systems
- Full name, publication number, and revision number of the manual

4.3 Downloads

On the customer help site you can also download the following, when applicable for the product:

- Firmware updates for your infrared camera.
- Program updates for your PC/Mac software.
- Freeware and evaluation versions of PC/Mac software.
- User documentation for current, obsolete, and historical products.
- Mechanical drawings (in *.dxf and *.pdf format).
- Cad data models (in *.stp format).
- Application stories.
- Technical datasheets.

5 Quick start guide

5.1 Procedure

Follow this procedure:

1. Before starting the camera for the first time, charge the battery for 3 hours using the stand-alone battery charger.
2. Put the battery into the camera battery compartment.
3. Insert a memory card into the card slot.

   Note Empty or use a memory card that has not previously been used in another type of camera. The cameras may organize files differently on the memory card. There is therefore a risk of losing data if the same memory card is used in different types of cameras.

4. Push the on/off button to turn on the camera.
5. Aim the camera toward the object of interest.
6. Adjust the infrared camera focus.

   Note It is very important to adjust the focus correctly. Incorrect focus adjustment affects how the image modes work. It also affects the temperature measurement.

7. Push the Save button to save an image.
8. Download and install FLIR Tools/Tools+ or FLIR Report Studio on your computer.[1]
9. Start FLIR Tools/Tools+ or FLIR Report Studio.
10. Connect the camera to the computer using the USB cable.
11. Import the images into FLIR Tools/Tools+ or FLIR Report Studio and create an inspection report.
12. Send the inspection report to your client.

5.2 To keep in mind

- Adjust the focus first. When the camera is out of focus, the measurement will be wrong.
- By default, most cameras adapt the scale automatically. Use this mode first, but do not hesitate to set the scale manually.
- A thermal camera has a resolution limit. This depends on the size of the detector, the lens, and the distance to the target. Use the center of the spot tool as a guide to the minimum possible object size, and get closer if necessary. Make sure to stay away from dangerous areas and live electrical components.
- Be careful when holding the camera perpendicular to the target. Be observant of reflections, especially at low emissivities—you, the camera, or the surroundings may become the main source of reflection.
- Select a zone of high emissivity, e.g., an area with a matte surface, to perform a measurement.
- Blank objects, i.e., those with low emissivities, may appear warm or cold in the camera, because they mainly reflect the environment.
- Avoid direct sunlight on the details that you are inspecting.
- Various types of faults, e.g., those in a building's construction, may result in the same type of thermal pattern.
- Correctly analyzing an infrared image requires professional knowledge about the application.

1. FLIR Tools+ and FLIR Report Studio are licensed software.

6 Register the camera

6.1 General

Register your camera to receive an extended warranty and other related benefits.

To register the camera, you must log in using a FLIR Customer Support account. If you already have an existing FLIR Customer Support account, you can use the same login credentials. To complete the registration, you must enter a four-digit verification code into the camera.

6.2 Procedure

Follow this procedure:

1. Use a computer or other device with internet access and go to the following website:

   http://support.flir.com/camreg

   This displays the following dialog:

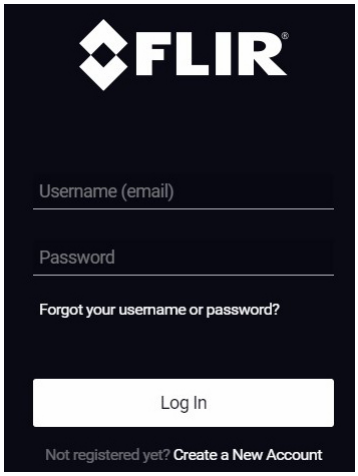

2. To log in with your existing FLIR Customer Support account, do the following:

   2.1. Enter your *Username* and *Password*.
   2.2. Click *Log In*.

3. To create a new FLIR Customer Support account, do the following:
   3.1. Click *Create a New Account*.
   3.2. Enter the required information and click *Create Account*.

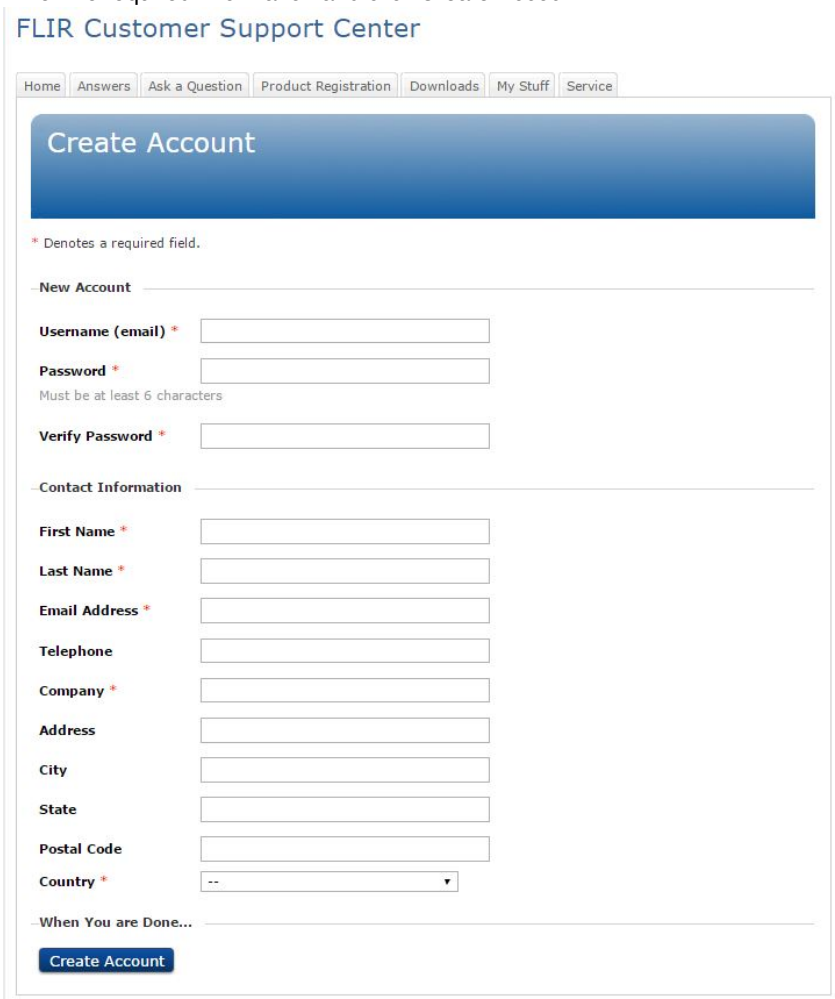

4. On the camera, select (*Settings*) >*Device settings* > *Camera information* > *Register camera*. This displays the following dialog box:

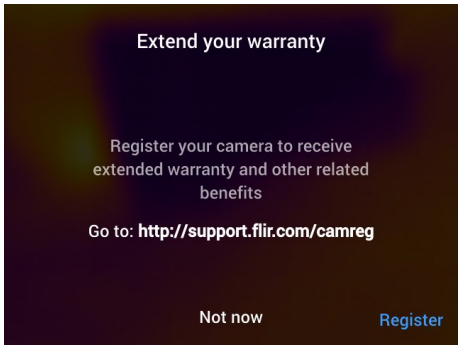

Note The first time you start the camera, the registration dialog box is displayed as a part of the setup of regional settings.

5. Select *Register* and push the navigation pad. This displays a dialog box with the serial number of the camera.

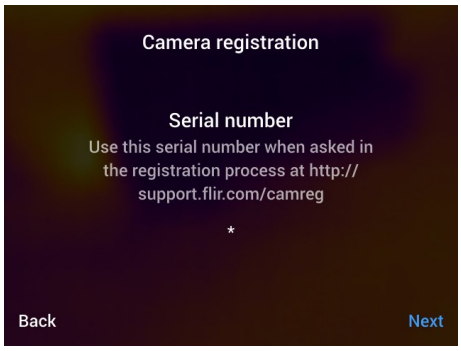

6. On the computer, enter the serial number of the camera and click *Validate*.

7. When the serial number is validated, click *Continue*.

8. Enter the required information and click *Register Product*.

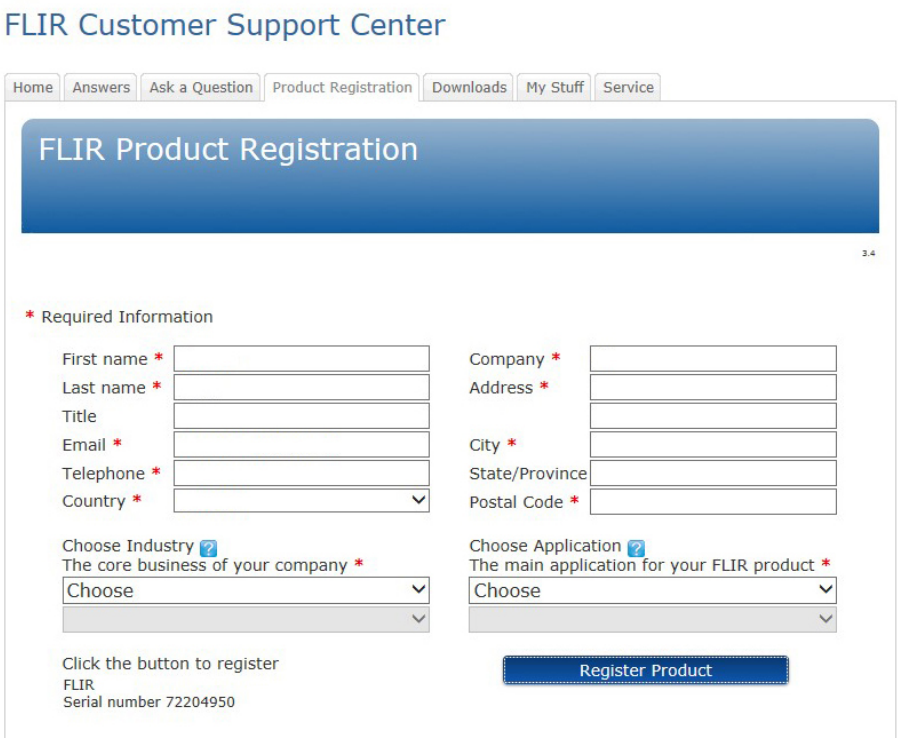

9. When the registration is completed, the four-digit code is displayed.

Note

- The code is also sent by e-mail to the address registered with your FLIR Customer Support account.
- The code is also displayed in your FLIR Customer Support portal under *My Stuff* > *Products*.

10. On the camera, do the following to enter the code:
    - Push the navigation pad up/down to select a digit.
    - Push the navigation pad left/right to navigate to the previous/next digit.
    - When all digits have been entered, push the navigation pad right to select *Submit*. Push the navigation pad to confirm.

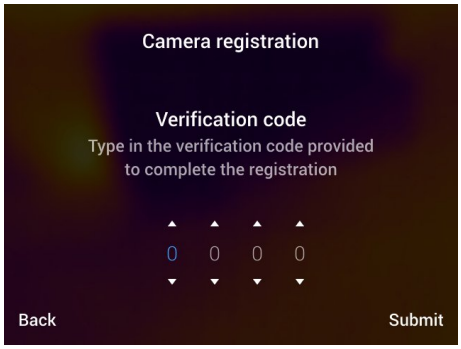

11. The camera is now registered and your extended warranty is activated.

7 A note about ergonomics

7.1 General

To prevent strain-related injuries, it is important that you hold the camera ergonomically correctly. This section gives advice and examples on how to hold the camera.

Note

- Always tilt the LCD screen to suit your work position.
- When you hold the camera, make sure that you support the optics housing with your left hand too. This decreases the strain on your right hand.

7.2 Figure

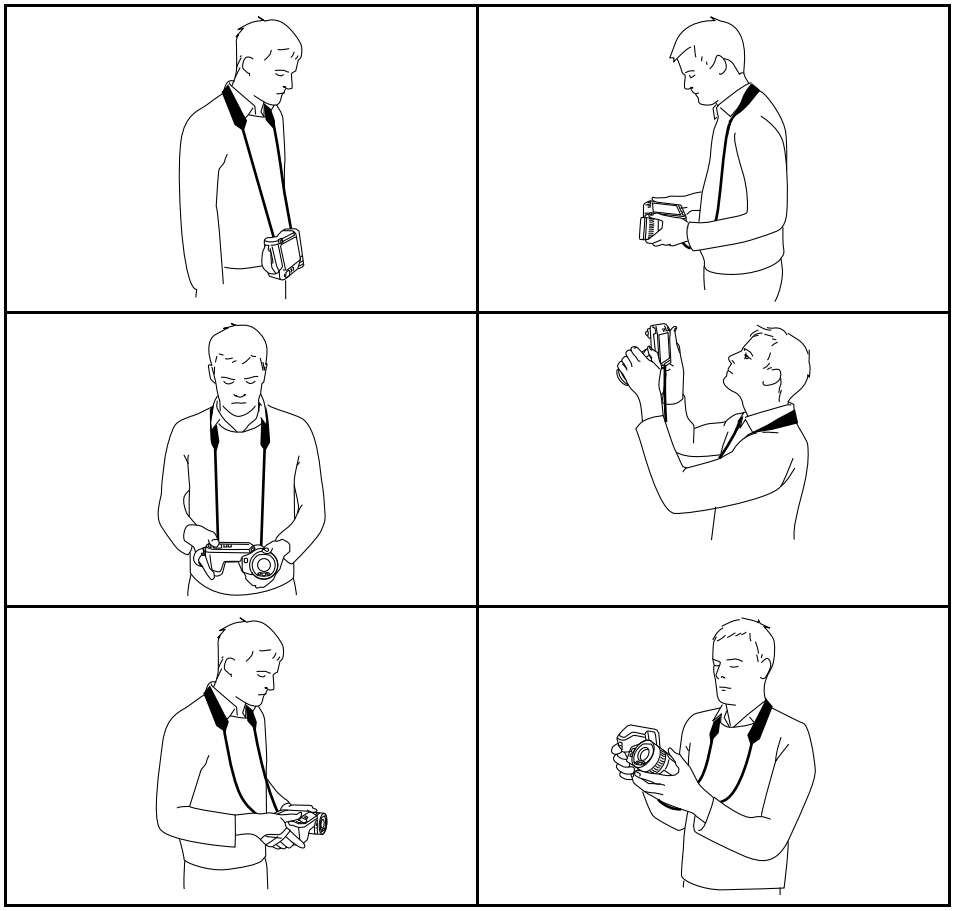

8 Camera parts

8.1 View from the rear

8.1.1 Figure

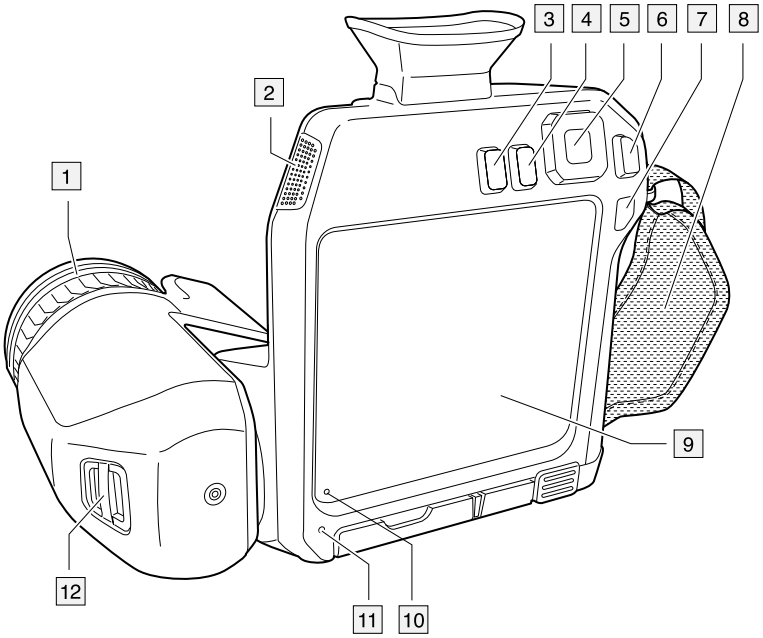

8.1.2 Explanation

1. Focus ring.
2. Speaker.
3. Programmable button.
4. Image archive button.
5. Navigation pad with center push.
6. Back button.
7. On/off button.
8. Hand strap.
9. Multi-touch LCD screen.
10. Light sensor.
11. Microphone.
12. Attachment point for the neck strap.

8.2 View from the front

8.2.1 Figure

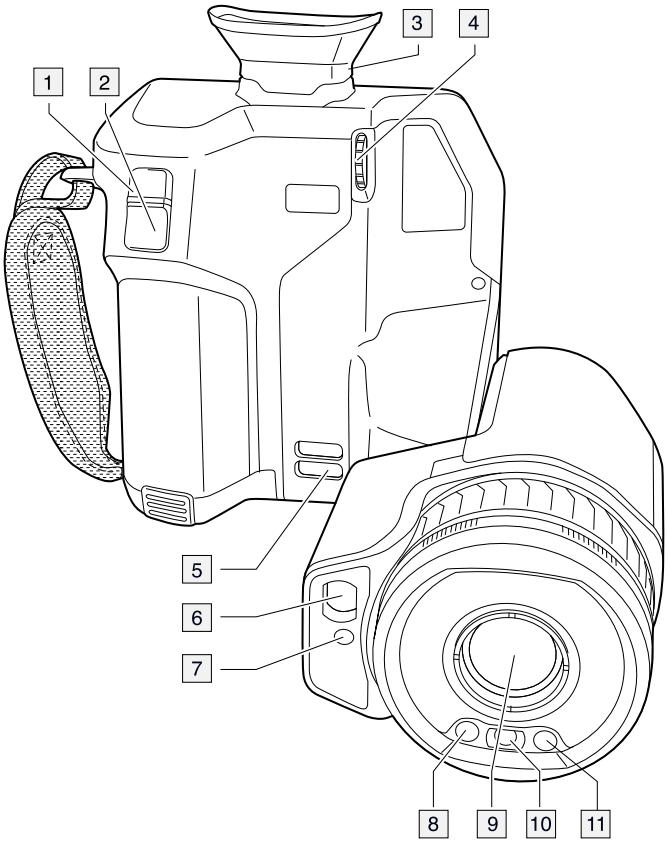

8.2.2 Explanation

1. Autofocus button.
2. Save button.
3. Viewfinder.
4. Knob to change the dioptric correction for the viewfinder.
5. Attachment point for the neck strap.
6. Laser receiver.
7. Laser transmitter.
8. Camera lamp (left and right sides).
9. Infrared lens.
10. Digital camera.

8.3 View from the bottom

8.3.1 Figure

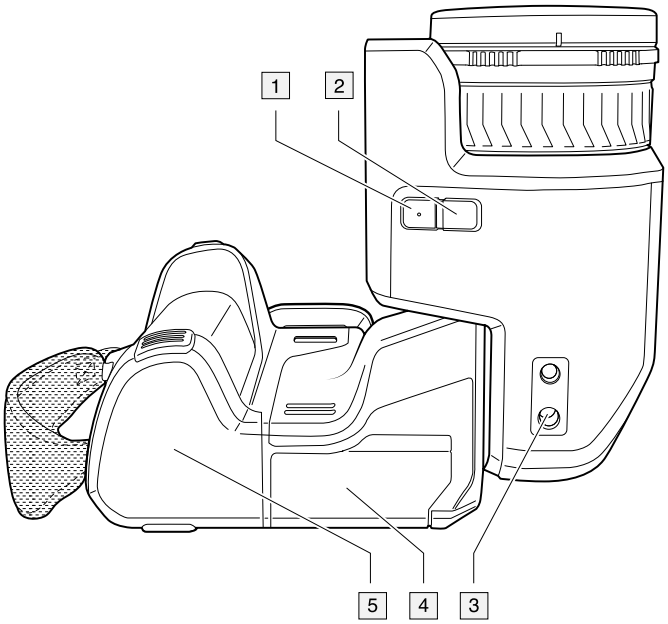

8.3.2 Explanation

1. Laser button.
2. Programmable button.
3. Tripod mount.
4. Cover for the connector compartment.
5. Battery.

8.4 Laser distance meter and laser pointer

8.4.1 General

The laser distance meter consists of a laser transmitter and a laser receiver. The laser distance meter determines the distance to a target by measuring the time it takes for a laser pulse to reach the target and return to the laser receiver. This time is converted to a distance, which is displayed on the screen.

The laser transmitter also works as a laser pointer. When the laser is on, you will see a laser dot approximately at the target.

⚠ **WARNING**
Do not look directly into the laser beam. The laser beam can cause eye irritation.

Note

- The laser is enabled by a setting. Select (*Settings*) > *Device settings* > *Lamp & laser* > *Enable lamp & laser*.
- The symbol is displayed on the screen when the laser is on.
- The camera can be configured to automatically measure the distance when an image is saved. Select (*Settings*) > *Save options & storage* > *Measure distance*. With this setting, the *Object distance* parameter (see section 16.5 *Changing the measurement parameters*, page 73) in the image data is automatically updated with the measured distance when an image is saved. (There is no effect on the *Object distance* setting in live mode.)
- If the target reflection is low or if the target is angled from the laser beam, there may be no return signal, and the distance cannot be measured.
- For large lenses that cover the laser transmitter and receiver, the laser functionality is disabled.
- The laser distance meter may not be enabled in all markets.

8.4.2 Laser transmitter and receiver

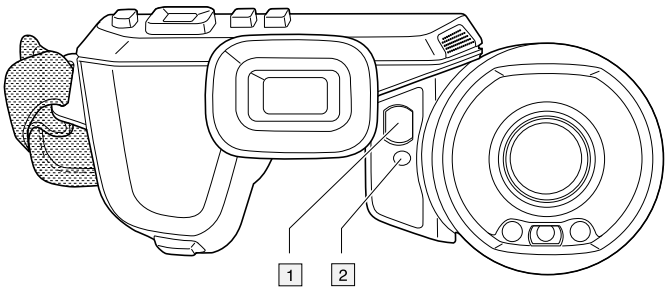

1. Laser receiver.
2. Laser transmitter.

8.4.3 Difference in position

This figure shows the difference in position between the laser transmitter and the optical center of the infrared lens. The laser transmitter and the optical axis are parallel.

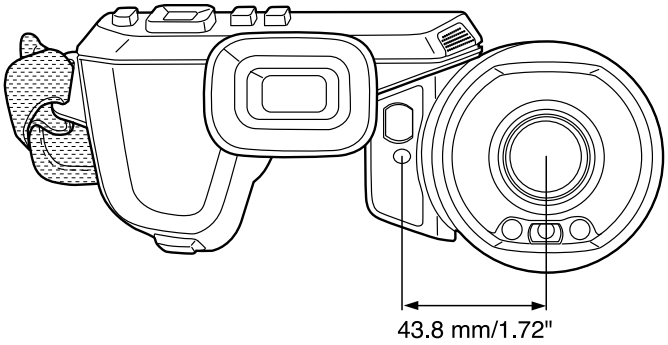

8.4.4 Laser warning label

A laser warning label with the following information is attached to the camera:

8.4.5 Laser rules and regulations

Wavelength: 650 nm. Maximum output power: 1 mW.

This product complies with 21 CFR 1040.10 and 1040.11 except for deviations pursuant to Laser Notice No. 50, dated June 24, 2007.

8.5 Viewfinder and display

By means of a sensor, the camera will register when you look into the viewfinder and then automatically turn off the display. This behavior can be changed by a setting. Select (*Settings*) > *Device settings* > *Display settings* > *Active display*. For more information, see section 25.1.4 *Device settings*, page 103.

9 Screen elements

9.1 General

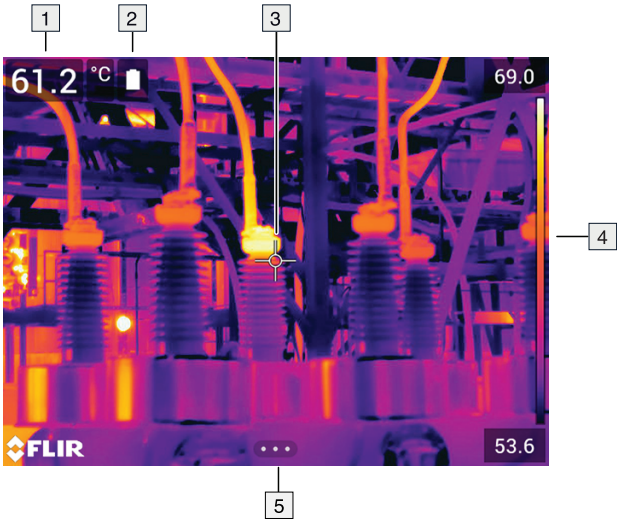

1. Result table.
2. Status icons.
3. Measurement tool (e.g., spotmeter).
4. Temperature scale.
5. Menu system button.

9.2 Menu system

To display the menu system, push the navigation pad or tap the menu system button •••.

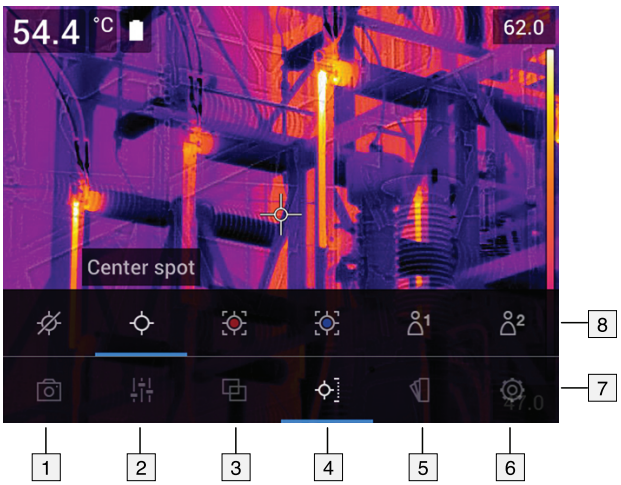

1. Recording mode button.
2. Measurement parameters button.
3. Image mode button.
4. Measurement button.

5. Color button.
6. Settings button.
7. Main menu.
8. Submenu.

9.3 Soft buttons

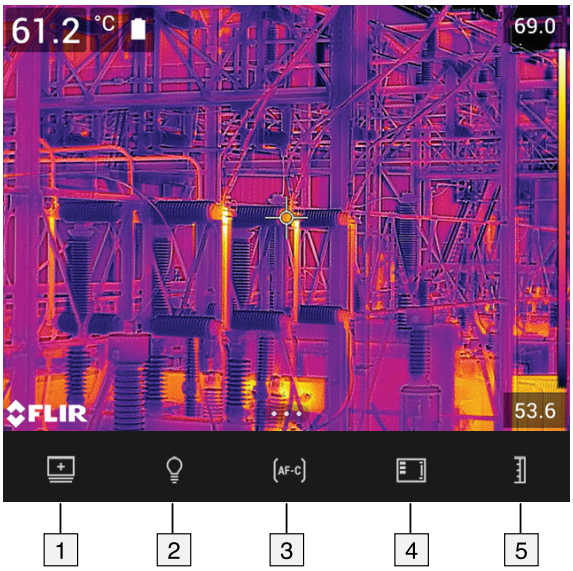

1. Work folder button: Touch to open a menu where you can create new folders and change the active folder.
2. Lamp button: Touch to turn on/off the camera lamp.
3. Continuous autofocus button: Touch to enable/disable continuous autofocus.
4. Overlay button: Touch to show/hide all overlay graphics and image overlay information.
5. Temperature scale button: Touch to switch between the automatic and manual image adjustment modes.

Note

- Before you can turn on the camera lamp, you need to enable the lamp. Select (*Settings*) > *Device settings* > *Lamp & laser* > *Enable lamp & laser* or *Enable lamp & laser* + *Use lamp as flash*.

- Before you can enable continuous autofocus, you need to enable the laser. Select (*Settings*) > *Device settings* > *Lamp & laser* > *Enable lamp & laser* or *Enable lamp & laser* + *Use lamp as flash*.

9.4 Status icons and indicators

	Battery status indicator. • When the battery status is 20–100%, the indicator is white. • When the battery is charging, the indicator is green. • When the battery status is below 20%, the indicator is red.
	The remaining storage capacity is below 100 MB.
	A Bluetooth headset is connected.
	External infrared window compensation is enabled.
	The laser is on.

9.5 Swipe-down menu

To open the swipe-down menu, place your finger at the top of the screen and swipe down.

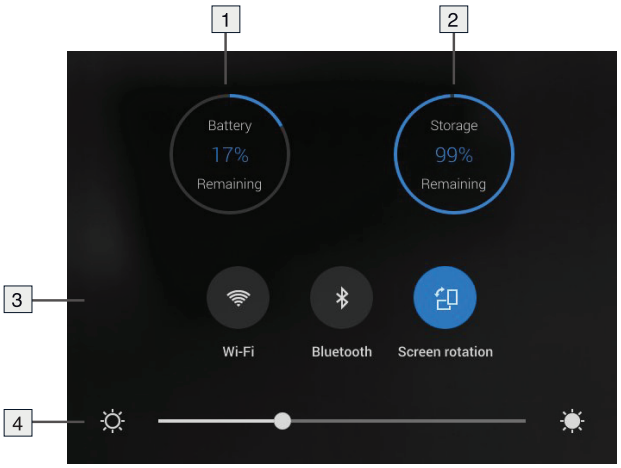

1. Battery status indicator.
2. Memory card storage status indicator.
3. • *Wi-Fi* button: Touch to enable/disable Wi-Fi. See also section 23 *Configuring Wi-Fi*, page 98.
   • *Bluetooth* button: Touch to enable/disable Bluetooth. See also section 22 *Pairing Bluetooth devices*, page 97.
   • *Screen rotation* button: Touch to enable/disable screen rotation.
4. Screen brightness slider: Used to control the brightness of the screen.

9.6 Image overlay information

The image information consists of items such as the date, emissivity, and atmospheric temperature. All image information is saved in the image file and can be viewed in the image archive. You can also choose to display selected items as image overlay information.

All image overlay information displayed on the live image will also be displayed on saved images. For more information, see sections section 25.1.4 *Device settings*, page 103 and 14.8 *Hiding all overlay*, page 65.

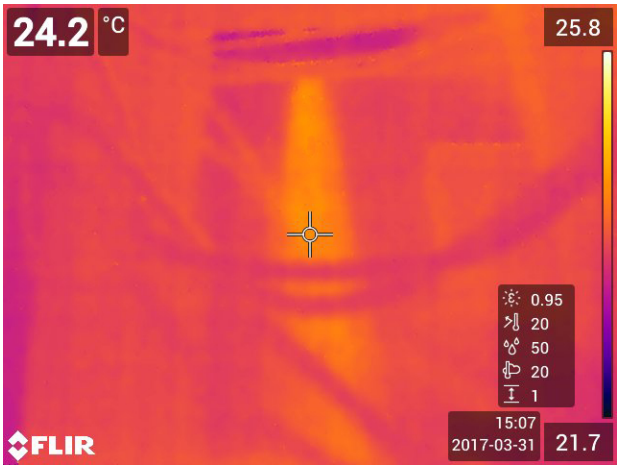

10 Navigating the menu system

10.1 General

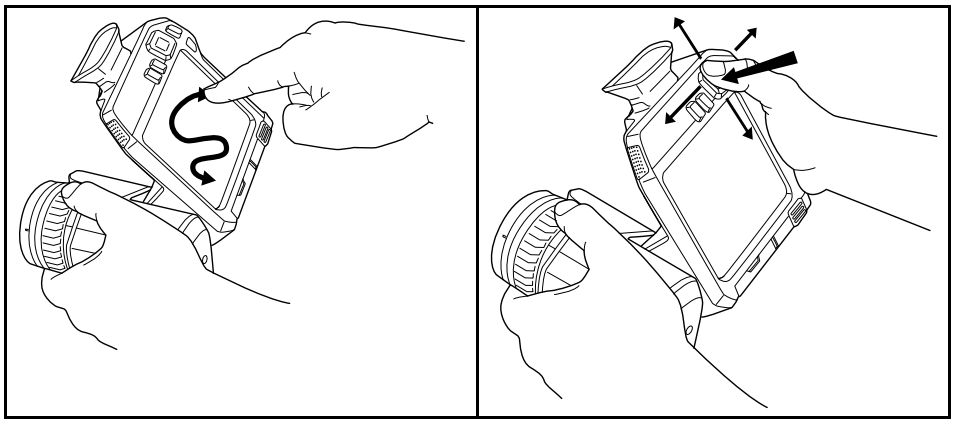

The figure above shows the two ways to navigate the menu system in the camera:

- Using your finger or a stylus pen specially designed for capacitive touch usage to navigate the menu system (left).
- Using the navigation pad to navigate the menu system (right) and the back button ↩.

You can also use a combination of the two.

In this manual, it is assumed that the navigation pad is used, but most tasks can also be carried out using your finger or a stylus pen.

10.2 Navigating using the navigation pad

You navigate the menu system by using the navigation pad and the back button:

- To display the menu system, push the center of the navigation pad.
- To navigate in menus, submenus, and dialog boxes, and to change values in dialog boxes, push the navigation pad up/down or left/right.
- To confirm changes and settings in menus and dialog boxes, push the center of the navigation pad.
- To leave dialog boxes and to go back in the menu system, push the back button ↩.

11 Handling the camera

11.1 Charging the battery

11.1.1 General

- Before starting the camera for the first time, charge the battery for 3 hours using the stand-alone battery charger.
- Select a mains socket that is near the equipment and easily accessible.

11.1.2 Using the stand-alone battery charger to charge the battery

11.1.2.1 Stand-alone battery charger LED indicator

Type of signal	Explanation
The white LED flashes.	The battery is being charged.
The white LED glows continuously.	The battery is fully charged.

11.1.2.2 Procedure

Follow this procedure:

1. Put one or two batteries in the battery charger.
2. Connect the power supply cable plug to the connector on the battery charger.
3. Connect the power supply mains-electricity plug to a mains socket.
4. When the white LED on the battery charger glows continuously, the batteries are fully charged.
5. It is good practice to disconnect the stand-alone battery charger from the mains socket when the batteries are fully charged.

11.1.3 Using the USB battery charger to charge the battery when it is inside the camera

Follow this procedure:

1. Put the battery into the battery compartment of the camera.
2. Connect the USB battery charger to a mains socket.
3. Open the cover for the connector compartment at the bottom of the camera.
4. Connect the USB connector of the USB battery charger to the USB-C connector in the connector bay of the camera.

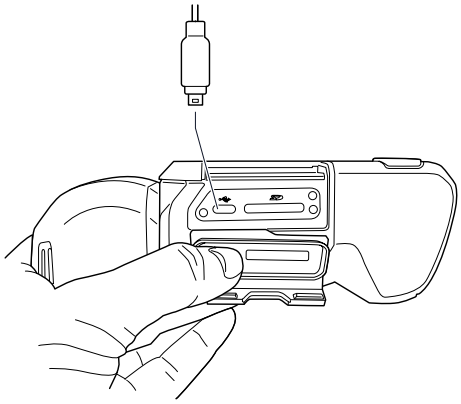

5. To check the status of the battery charging, do one of the following:
   - If the camera is turned on: Place your finger at the top of the screen and swipe down. The battery status is displayed on the swipe-down menu.
   - If the camera is turned off: The battery charging indicator is temporarily displayed on the screen.
6. It is good practice to disconnect the USB battery charger from the mains socket when the battery is fully charged.

Note When closing the cover for the connector compartment, firmly press along the edges of the cover to make sure that it closes tightly.

11.1.4 Charging the battery using a USB cable connected to a computer

Follow this procedure:

1. Open the cover for the connector compartment at the bottom of the camera.
2. Connect a USB cable to the USB-C connector in the connector bay. Connect the other end of the USB cable to the computer.

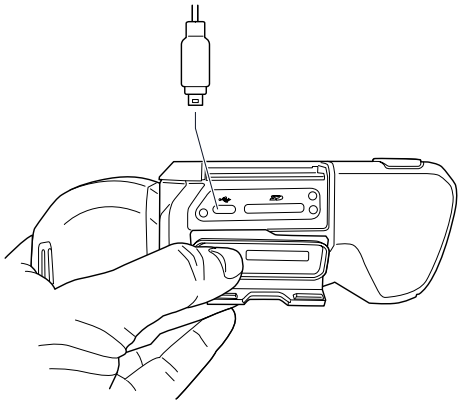

Note

- To charge the camera, the computer must be turned on.
- Charging the camera using a USB cable connected to a computer takes *considerably* longer than using the USB battery charger or the stand-alone battery charger. If the camera is on, it may use more power than the computer provides.
- When closing the cover for the connector compartment, firmly press along the edges of the cover to make sure that it closes tightly.

11.2 Installing and removing the camera battery

11.2.1 Installing the battery

Note Use a clean, dry cloth to remove any water or moisture on the battery before you install it.

11.2.1.1 Procedure

Follow this procedure:

1. Push the battery into the battery compartment. The battery makes a click when it locks in place.

11.2.2 Removing the battery

Note Use a clean, dry cloth to remove any water or moisture on the camera before you remove the battery.

Follow this procedure:

1. Turn off the camera.
2. Push the two release buttons and remove the battery from the camera.

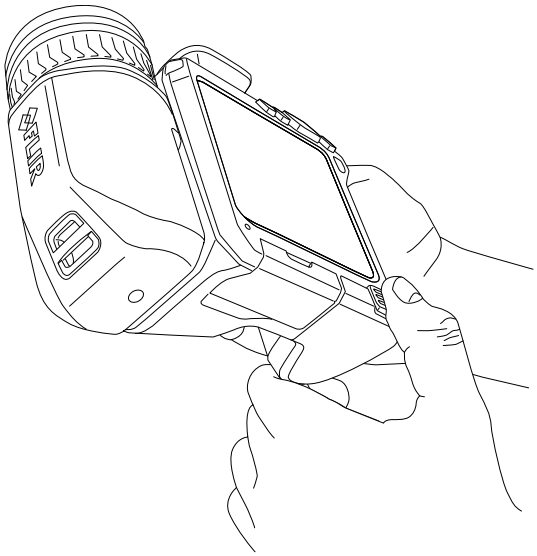

11.3 Turning on and turning off the camera

- To turn on the camera, push the on/off button ⏻.
- To turn off the camera, push and hold the on/off button ⏻ for more than 0.5 second.

Note Do not remove the battery to turn off the camera.

11.4 Adjusting the viewfinder's dioptric correction (sharpness)

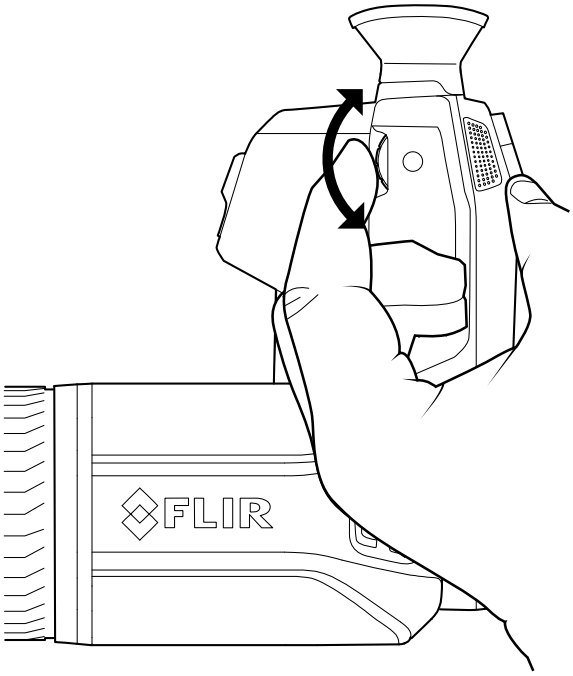

CAUTION
Make sure that the beams from the intensive energy sources do not go into the viewfinder. The beams can cause damage to the camera. This includes the devices that emit laser radiation, or the sun.

To adjust the viewfinder's dioptric correction, look through the viewfinder and rotate the adjustment knob clockwise or counter-clockwise for the best sharpness.

Note

- Maximum dioptric correction: +1.
- Minimum dioptric correction: –3.

11.5 Adjusting the angle of lens

11.5.1 Figure

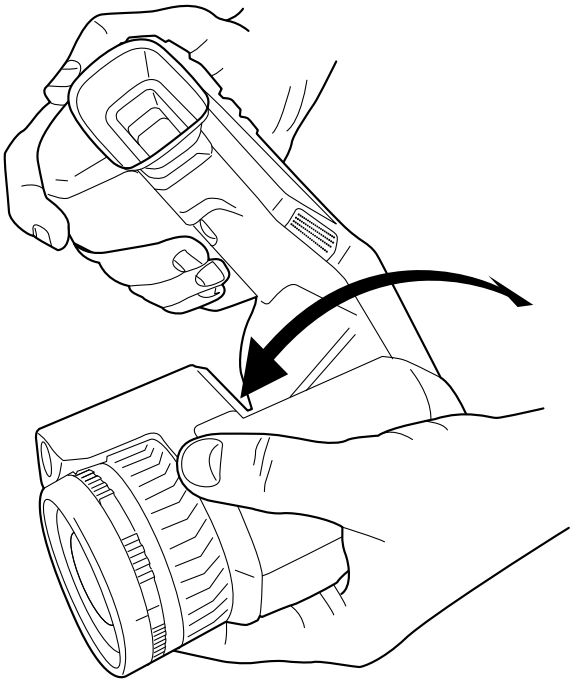

11.5.2 Procedure

To adjust the angle, tilt the lens up or down.

11.6 Adjusting the infrared camera focus manually

11.6.1 Figure

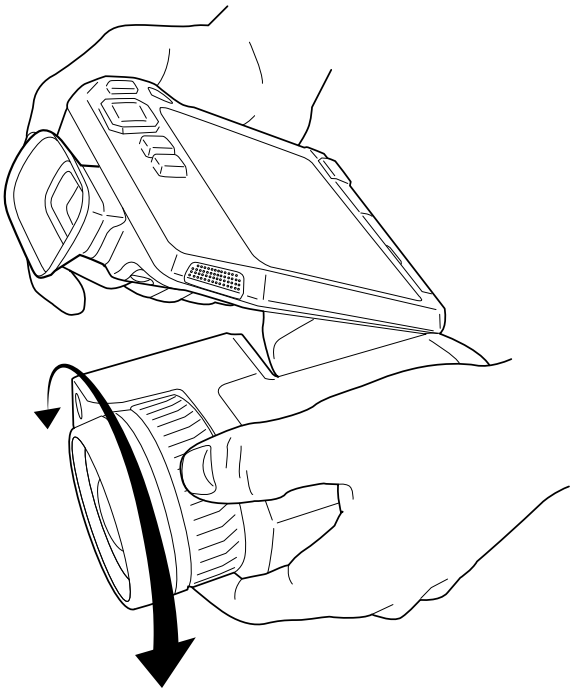

11.6.2 Procedure

Follow this procedure:

1. Do one of the following:
   - For far focus, rotate the focus ring clockwise (with the LCD screen facing toward you).
   - For near focus, rotate the focus ring counter-clockwise (with the LCD screen facing toward you).

Note Do not touch the lens surface when you adjust the infrared camera focus manually. If this happens, clean the lens according to the instructions in 26.2 *Infrared lens*, page 106.

Note It is very important to adjust the focus correctly. Incorrect focus adjustment affects how the image modes *Thermal MSX*, *Thermal*, and *Picture-in-picture* work. It also affects the temperature measurement.

11.7 Autofocusing the infrared camera

11.7.1 General

When autofocusing, the infrared camera can use one of the following focus methods:

- *Contrast*: The focus is based on maximizing the image contrast.
- *Laser*: The focus is based on a laser distance measurement. The laser is used when the camera is autofocusing.

The focus method is configured by a setting. Select (*Settings*) > *Device settings* > *Focus* > *Auto focus* and then select *Contrast* or *Laser*.

Note For large lenses that cover the laser transmitter and receiver, the laser functionality is disabled. This means that the focus method *Laser* is not available.

11.7.2 Figure

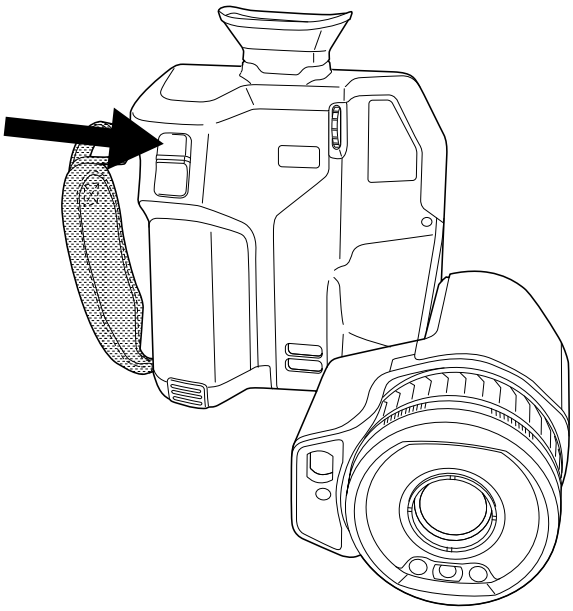

11.7.3 Procedure

⚠ WARNING
When the camera is set to autofocusing with the laser method (*Settings* > *Device settings* > *Focus* > *Auto focus* >*Laser*), do not point the camera at the face of a person when you use the autofocus function. The laser beam can cause eye irritation.

Follow this procedure:

1. To autofocus the infrared camera, push the Autofocus button.

Note You can also assign the autofocus function to one of the programmable buttons P. For more information, see section 11.13 *Assigning functions to the programmable buttons*, page 37.

11.8 Continuous autofocus

11.8.1 General

The infrared camera can be set up to perform continuous autofocusing.

When the continuous autofocus function is enabled, the camera bases the focus adjustments on continuous laser distance measurements. The laser is continuously on.

WARNING

Do not point the camera at the face of a person when the continuous autofocus function is on. The camera uses laser distance measurements (that are continuous) for the focus adjustments. The laser beam can cause eye irritation.

Note

- Before you can enable continuous autofocus, you need to enable the laser and select laser as focus method. See section 11.8.2 *Procedure*, page 33.
- When continuous autofocus is enabled, it is not possible to manually adjust the focus by rotating the focus ring.
- For large lenses that cover the laser transmitter and receiver, the laser functionality is disabled. This means that continuous autofocus is not available.

11.8.2 Procedure

Follow this procedure:

1. Push the navigation pad to display the menu system.
2. Select (*Settings*) and push the navigation pad. This displays the *Settings* menu.
3. Use the navigation pad to select *Device settings* > *Lamp & laser* > *Enable lamp & laser*.
4. Use the navigation pad to select *Device settings* > *Focus* > *Autofocus* > *Laser*.
5. Do one of the following:
   - Use the navigation pad to select *Device settings* > *Focus* > *Continuous autofocus* > *On*.
   - Touch the soft button AF-C.

Note You can also assign the continuous autofocus function to one of the programmable buttons P. For more information, see section 11.13 *Assigning functions to the programmable buttons*, page 37.

11.9 Operating the laser distance meter

11.9.1 General

The laser distance meter consists of a laser transmitter and a laser receiver. The laser distance meter determines the distance to a target by measuring the time it takes for a laser pulse to reach the target and return to the laser receiver. This time is converted to a distance, which is displayed on the screen.

The laser transmitter also works as a laser pointer. When the laser is on, you will see a laser dot approximately at the target.

WARNING

Do not look directly into the laser beam. The laser beam can cause eye irritation.

Note

- The laser is enabled by a setting. Select (*Settings*) > *Device settings* > *Lamp & laser* > *Enable lamp & laser*.
- The symbol is displayed on the screen when the laser is on.
- The camera can be configured to automatically measure the distance when an image is saved. Select (*Settings*) > *Save options & storage* > *Measure distance*. With this setting, the *Object distance* parameter (see section 16.5 *Changing the measurement parameters*, page 73) in the image data is automatically updated with the measured distance when an image is saved. (There is no effect on the *Object distance* setting in live mode.)
- If the target reflection is low or if the target is angled from the laser beam, there may be no return signal, and the distance cannot be measured.
- For large lenses that cover the laser transmitter and receiver, the laser functionality is disabled.
- The laser distance meter may not be enabled in all markets.

11.9.2 Procedure

Follow this procedure:

1. To turn on the laser, push and hold the laser button . The distance to the target is displayed on the screen.
2. To turn off the laser, release the laser button .

11.10 Measuring areas

11.10.1 General

Note For large lenses that cover the laser transmitter and receiver, the laser functionality is disabled. This means that the area measurement function is not available.

The distance measured by the laser distance meter can be used as the basis for area calculations. A typical application is to estimate the size of a damp stain on a wall.

To measure the area of a surface, you need to lay out a box or circle measurement tool on the screen. The camera calculates the area of the surface enclosed by the box or circle tool. The calculation is an estimate of the surface area, based on the measured distance to the target.

When the laser distance meter is on, you will see a laser dot approximately at the target. The laser distance meter measures the distance to that target. The camera assumes that this distance is valid for the entire box or circle tool.

For successful area measurements, keep the following in mind:

- Make sure that the box or circle tool is in the center of the image.
- Adjust the size of the box or circle tool to the size of the target.
- Hold the camera perpendicular to the target.
- Avoid targets with many details at different distances from the camera.

11.10.2 Procedure

Note This procedure assumes that you have enabled the laser. Select (*Settings*) > *Device settings* > *Lamp & laser* > *Enable lamp & laser*.

Follow this procedure:

1. Add a box or circle measurement tool, see section 16.2 *Adding/removing measurement tools*, page 71.
2. Set the camera to measure and display the area of the box or circle, see section 16.6 *Displaying values in the result table*, page 76.
3. Make sure that the box or circle tool is in the center of the image, see section 16.4 *Moving and resizing a measurement tool*, page 72.
4. Adjust the size of the box or circle tool to the size of the target, see section 16.4 *Moving and resizing a measurement tool*, page 72.
5. Hold the camera perpendicular to the target. Push and hold the laser button .
6. The calculated area is displayed in the result table.

11.11 Connecting external devices and storage media

11.11.1 General

You can connect the following external devices and media to the camera:

- An SD memory card.
- A computer to move image and video files to and from the camera, using a USB-C to USB-A or a USB-C to USB-C cable.
- A video monitor or projector, using a USB-C to HDMI adapter.
- A USB battery charger.

Note Empty or use a memory card that has not previously been used in another type of camera. The cameras may organize files differently on the memory card. There is therefore a risk of losing data if the same memory card is used in different types of cameras.

11.11.2 Figure

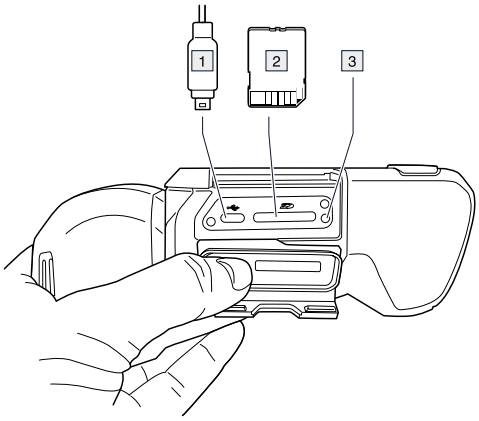

11.11.3 Explanation

1. USB-C cable.
2. SD memory card.

3. LED indicator showing that the memory card is busy.

   Note

   - Do not eject the memory card when this LED is flashing.
   - Do not connect the camera to a computer when this LED is flashing.

Note When closing the cover for the connector compartment, firmly press along the edges of the cover to make sure that it closes tightly.

11.12 Moving files to a computer

11.12.1 General

When you save an image or video clip in the image archive of the camera, the file is stored on the memory card.

You can connect the camera to a computer, using a USB-C to USB-A or a USB-C to USB-C cable. Once connected, you can move the image and video files from the memory card to the computer.

11.12.2 Procedure

Follow this procedure:

1. Open the cover for the connector compartment at the bottom of the camera.
2. Connect a USB cable to the USB-C connector in the connector bay. Connect the other end of the USB cable to the computer.

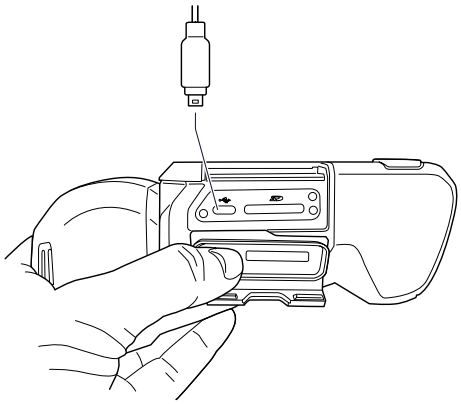

3. Turn on the camera.
4. Do one of the following:

   - Move the files to the computer using a drag-and-drop operation in Microsoft Windows Explorer.

     Note Moving a file using a drag-and-drop operation does not delete the file in the camera.

   - Import the images into FLIR Tools/Tools+ or FLIR Report Studio.

Note When closing the cover for the connector compartment, firmly press along the edges of the cover to make sure that it closes tightly.

11.13 Assigning functions to the programmable buttons

11.13.1 General

There are two individually programmable buttons: one above the screen and one at the bottom of the optics housing.

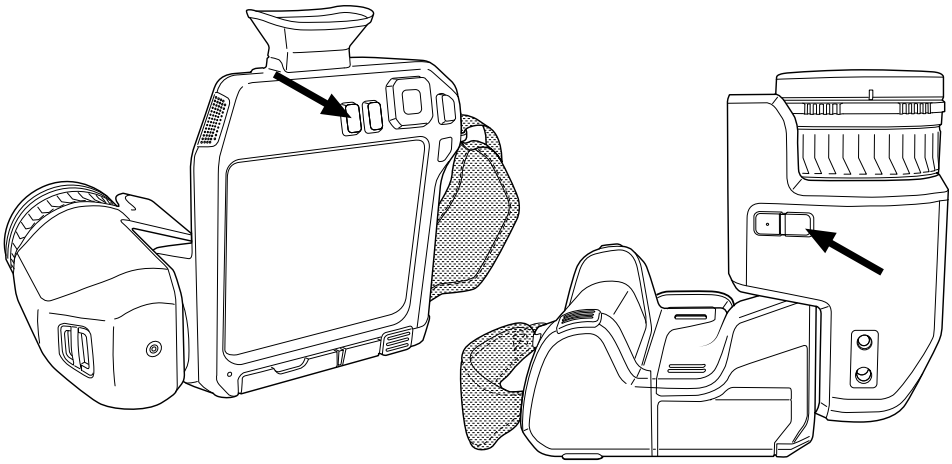

You can assign different functions to the programmable buttons. You can, for example, use a programmable button to easily switch between two settings you use often. You can also choose to define two different setups for saving and previewing: the usual setup for the Save button (which is defined by the *Save options and storage* settings, see section 25.1.3 *Save options & storage*, page 102) and another setup for a programmable button.

Available options for the programmable buttons:

- *No action*: This is the default setting. Nothing will happen when you push the button.
- *Switch Auto <> Manual temperature scale*: Switch between automatic or manual image adjustment mode. For more information, see section 14.3 *Adjusting the infrared image*, page 59.
- *Autofocus*: One-shot autofocus of the infrared camera.
- *Continuous autofocus*[2]: Switch between the enabled/disabled continuous autofocus functions.
- *Calibrate*: Perform a manual NUC. For more information, see section 14.7 *Performing a non-uniformity correction (NUC)*, page 65.
- *Auto-adjust the manual temperature scale*: Perform an automatic adjustment of the image while remaining in manual image adjustment mode.
- *Switch Thermal <> Digital camera*[2]: Switch between the image modes *Thermal* and *Digital camera*. For more information, see section 15 *Working with image modes*, page 67.
- *Switch Thermal <> Thermal MSX*: Switch between the image modes *Thermal* and *Thermal MSX*. For more information, see section 15 *Working with image modes*, page 67.
- *Switch 1x zoom <> Max zoom*: Switch between the digital zoom factor of 1× and maximum zoom.
- *Switch camera flash On <> Off*: Switch between the enabled/disabled camera flash functions. For more information, see section 11.14 *Using the camera lamp as a flash*, page 38.

2. This item is dependent on the lens model.

Note The flash function will not be activated if the setting *Lamp & laser* is set to the option *Disable all*. For more information, see section 25.1.4 *Device settings*, page 103.

- *Switch single shot* <> *Video*: Switch between the recording modes *Single shot* and *Video*.
- *Switch between two latest palettes*: Switch between the two last-used color palettes. For more information, see section 14.5 *Changing the color palettes*, page 63.
- *Switch temperature range*: Cycle through the camera temperature ranges. For more information, see section 25.1.2 *Camera temperature range*, page 102.
- *Switch screen rotation On* <> *Off*: Switch between enabled/disabled screen rotation.
- *Save*: Save an image.
- *Save* + *Prompt for note*: Save an image and display the note annotation tool.
- *Save* + *Prompt for table*: Save an image and display the table annotation tool.
- *Save* + *Prompt for voice annotation*: Save an image and display the voice annotation tool.
- *Save* + *Prompt for sketch*: Save an image and display the sketch annotation tool.
- *Save* + *Select annotation from menu*: Save an image and display the annotation tool menu.
- *Preview*: Display a preview image.
- *Preview* + *Prompt for note*: Display a preview image and the note annotation tool.
- *Preview* + *Prompt for table*: Display a preview image and the table annotation tool.
- *Preview* + *Prompt for voice annotation*: Display a preview image and the voice annotation tool.
- *Preview* + *Prompt for sketch*: Display a preview image and the sketch annotation tool.
- *Preview* + *Select annotation from menu*: Display a preview image and the annotation tool menu.

11.13.2 Procedure

Follow this procedure:

1. Push and hold the programmable button P. This displays the *Programmable button* menu.
2. Push the navigation pad up/down to select one of the functions. Push the center of the navigation pad to confirm.

11.14 Using the camera lamp as a flash

11.14.1 General

Note The availability of this feature is dependent on the lens model.

The camera lamp can be used as a flash for the digital camera. When the flash function is enabled, the camera lamp will flash when an image is saved by pushing the Save button.

You can also turn on the camera lamp to use it as a flashlight.

11.14.2 Procedure

Follow this procedure:

1. Push the navigation pad to display the menu system.
2. Select (*Settings*) and push the navigation pad. This displays the *Settings* menu.
3. Use the navigation pad to select *Device settings* > *Lamp & laser*.

4. Do one of the following:
   - To enable the camera lamp function, select *Enable lamp & laser* and push the navigation pad. To turn on/off the camera lamp, touch the soft button .
   - To enable the flash function, select *Enable lamp & laser* + *Use lamp as flash* and push the navigation pad.
   - To disable the camera lamp and flash functions, select *Disable all* and push the navigation pad.

Note You can also assign the function *Switch camera flash On <> Off* to one of the programmable buttons P. For more information, see section 11.13 *Assigning functions to the programmable buttons*, page 37.

11.15 Changing camera lenses

Note If the new lens has not been used with the camera before, the lens–camera combination must be calibrated after the lens has been mounted. See section 11.16 *Calibrating the lens–camera combination*, page 42 for information on how to do this.

Note Do not touch the lens surface when you change lenses. If this happens, clean the lens according to the instructions in 26.2 *Infrared lens*, page 106.

Follow this procedure:

1. Take a firm grip around the inner ring of the lens. Rotate the inner ring 30° counterclockwise until it stops.

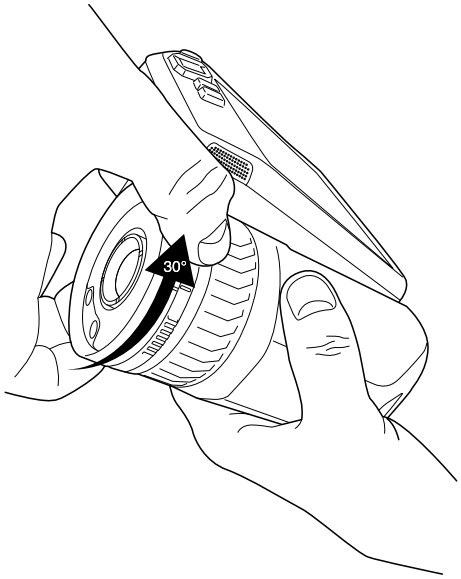

2. Carefully pull out the lens.

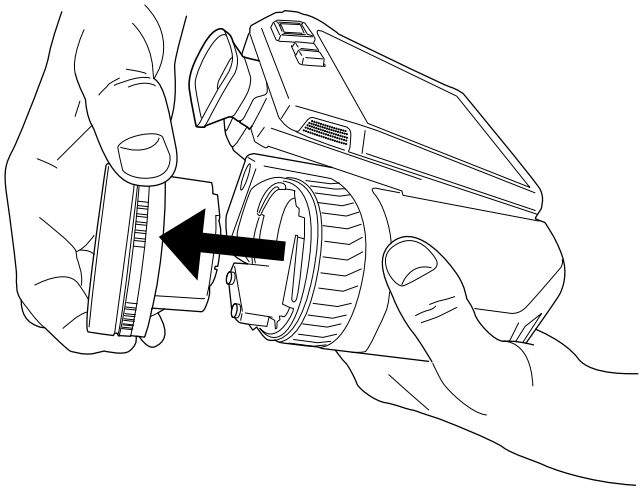

3. The infrared detector is now fully exposed. Do not touch this surface. If you see dust on the detector, follow the instructions in 26.3 *Infrared detector*, page 107.

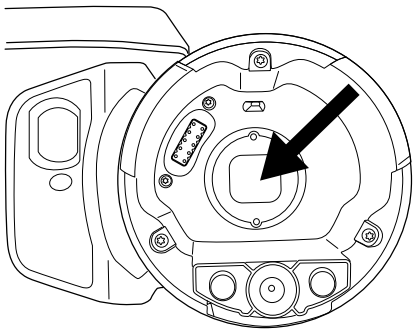

4. Make sure that the inner ring of the camera lens is fully in its open position.
   - Correct: The tooth (1) is in its end position at the black stop pin (2).

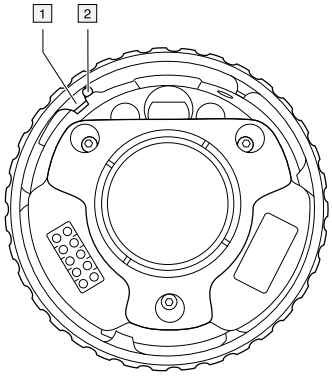

   - Wrong: You must rotate the inner ring until the tooth (1) reaches the black stop pin (2).

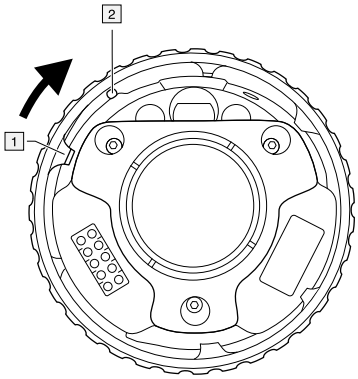

5. Carefully push the lens into position.

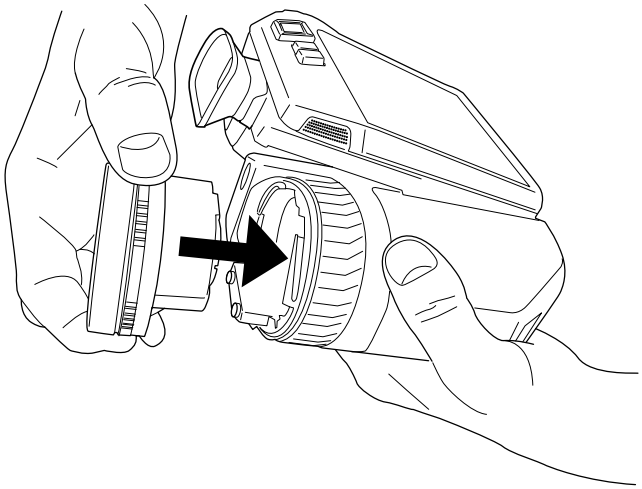

6. Rotate the inner ring of the lens 30° clockwise. The lens makes a click when it locks in place.

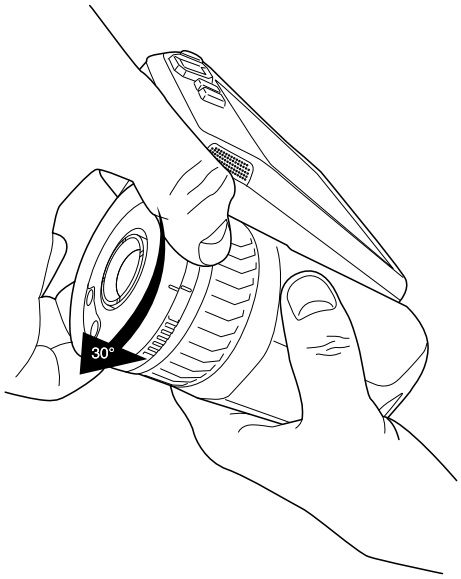

7. Make sure that the two index marks are aligned, indicating that the lens is locked in place.

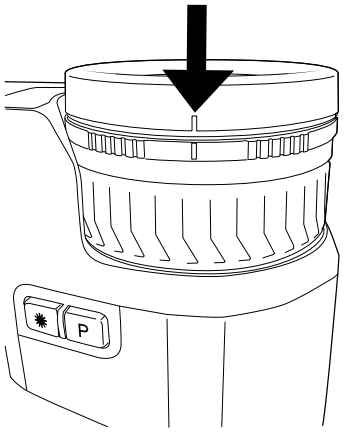

11.16 Calibrating the lens–camera combination

11.16.1 Introduction

Before a new lens can be used with the camera, the lens–camera combination must be *calibrated*.

This is a process that previously had to be performed by a FLIR service department, but for the FLIR T8xx series the calibration can be performed by the user. This feature is called AutoCal. The AutoCal procedure requires a calibration target, which is included in the lens package.

11.16.2 AutoCal procedure

Follow this procedure:

1. Dip the calibration target in water for 1 second and let the excess drip off.

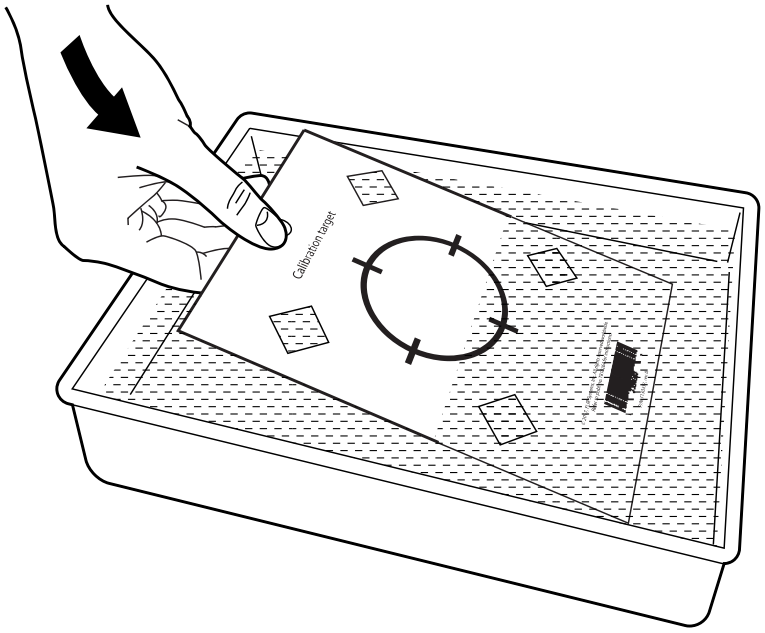

2. Tape or hang the calibration target on a wall.

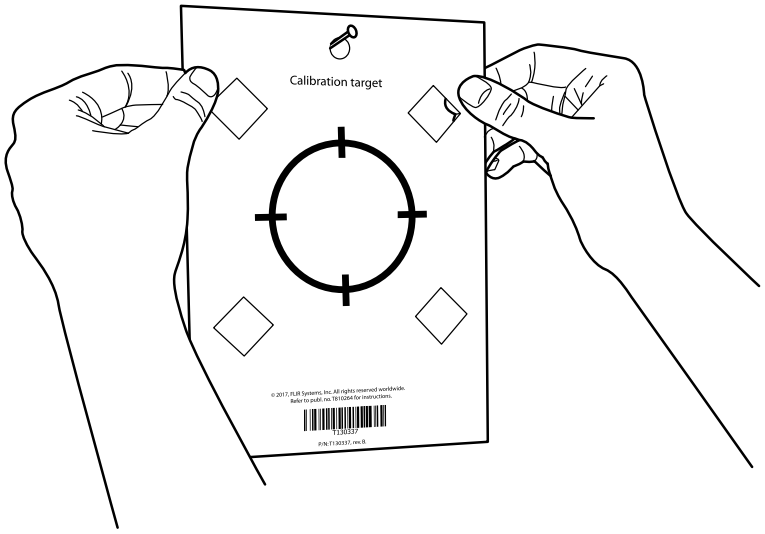

3. Mount the new lens on the camera according to the procedure in section 11.15 *Changing camera lenses*, page 39. When the lens is mounted, the calibration wizard starts automatically.

4. From a distance of 2 m (6.6 ft.), aim the camera toward the crosshair, using the laser pointer. The camera will take a picture automatically.

NOTE
Make sure the camera's optical path is perpendicular to the calibration target. See the image below.

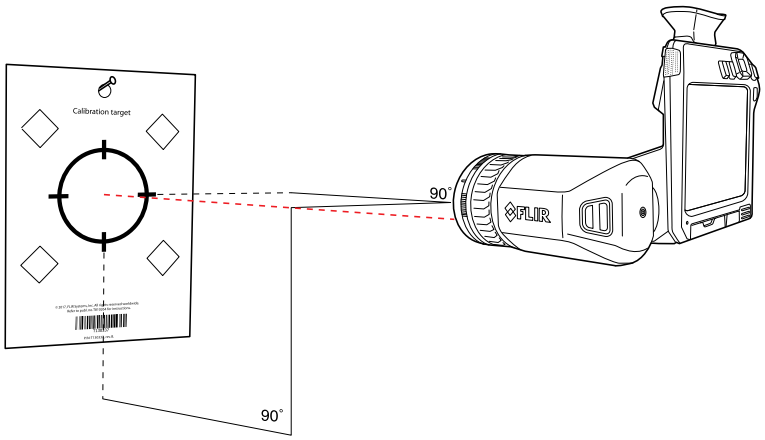

5. In the camera, align the thermal and visual images (indicated by the two squares in the image below), using the touchscreen arrows. The lens–camera combination is now calibrated.

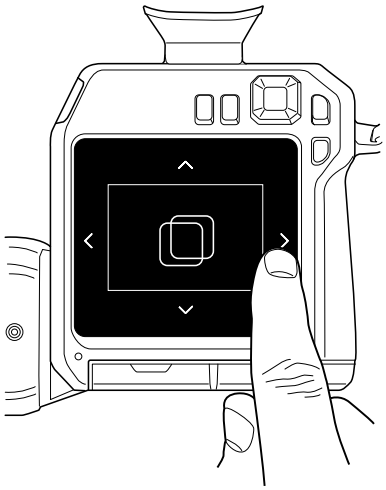

To repeat the procedure at a later time, go to *Settings* > *Camera information* > *Calibrate lens...*.

11.17 Neck strap

To attach the neck strap to the camera, use the two attachment points indicated in the figure.

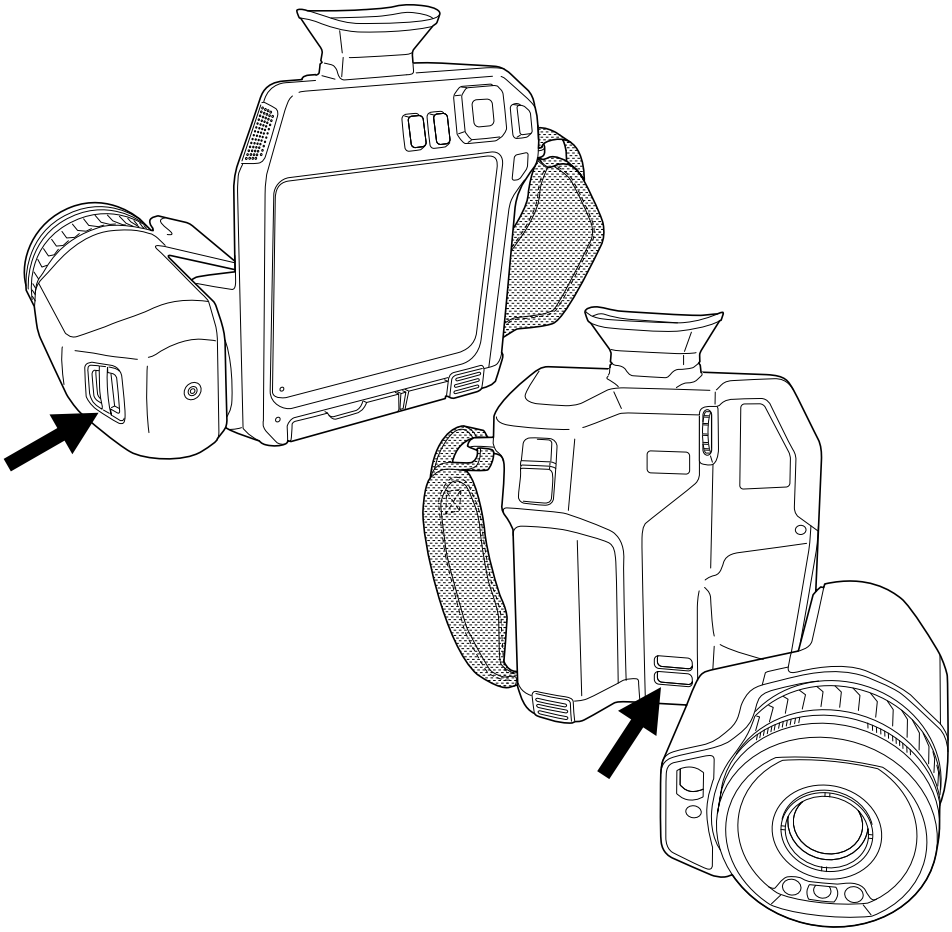

11.18 Hand strap

To replace the hand strap, follow this procedure:

1. Remove the battery.
2. Open the hook-and-loop fastener and remove the hand strap from the upper attachment point.

3. Remove the two T6 screws.

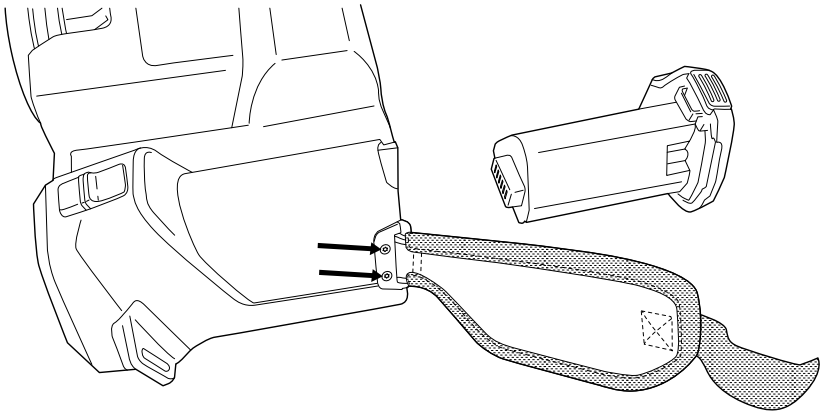

4. Remove the hand strap from the bracket at the base of the camera.
5. Put the new hand strap into the bracket at the base of the camera.

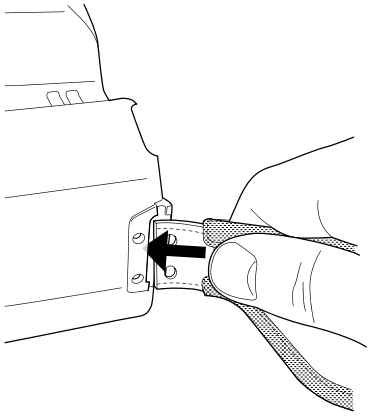

6. Push the bracket into the camera. Make sure that the two holes in the hand strap are aligned with the holes in the bracket.
7. Tighten the two T6 screws.
8. Thread the loose strap through the upper attachment point. Secure the strap with the hook-and-loop fastener.

12 Saving and working with images

12.1 About image files

12.1.1 General

When you save an image, the camera saves an image file that includes all thermal and visual information. This means that you can open an image file at a later time and, for example, select another image mode, apply color alarms, and add measurement tools.

The image *.jpg file is fully radiometric and saved lossless, which enables full post-processing in image analysis and reporting software from FLIR Systems. There is also a regular *.jpg component (lossy) for convenient viewing in non-FLIR Systems software (e.g., Microsoft Explorer).

Note

- The camera can also be configured to save an extra low-resolution visual image as a separate file. This can be convenient if you are not using a post-processing software.

  Select (*Settings*) > *Save options & storage* > *Photo as separate JPEG* = *On*.
- When the *Digital camera* image mode is selected, a high-resolution digital image is stored when an image is saved. However, no thermal information is stored. For more information, see section 15 *Working with image modes*, page 67.
- You can choose to turn off the digital camera. This can, for example, be required in restricted areas and in confidential (e.g., doctor/patient) situations. Select (*Settings*) > *Save options & storage* > *Digital camera* = *Off*. When the digital camera is off, features that require visual information, such as the images modes *Thermal MSX* and *Picture in picture*, are disabled.

12.1.2 File-naming convention

The default naming convention for image files is FLIRxxxx.jpg, where xxxx is a unique counter.

It is also possible to save images with a date prefix added to the filename. However, these files may not automatically be detected by third-party applications. For more information, see the setting *File naming format* in section 25.1.3 *Save options & storage*, page 102.

12.1.3 Storage capacity

When you save an image, the camera stores the image file on the memory card.

The size of an image file (with no annotations) is typically less than 1000 kB. Thus, the capacity of a 8 GB memory card is approximately 8000 images.

Note Empty or use a memory card that has not previously been used in another type of camera. The cameras may organize files differently on the memory card. There is therefore a risk of losing data if the same memory card is used in different types of cameras.

12.1.4 About UltraMax

UltraMax[3] is an image enhancement feature that increases the image resolution and lowers the noise, making small objects easier to see and measure. An UltraMax image is twice as wide and high as an ordinary image.

3. Not supported when using macro.

When an UltraMax image is captured by the camera, several ordinary images are saved within the same file. Capturing all the images can take up to 1 second. To fully utilize UltraMax, the images need to be slightly different, which can be accomplished by a minute movement of the camera. You should hold the camera firmly in your hands (do not put it on a tripod), which will make these images vary just a little during the capture. Correct focus, a high-contrast scene, and a non-moving target are other conditions that help to achieve a good-quality UltraMax image.

FLIR Tools/Tools+ and FLIR ResearchIR Max have the ability to process UltraMax images. Other FLIR software will treat the image as a regular image.

To configure the camera for UltraMax, select (*Settings*) > *Save options & storage* > *Image resolution* = *UltraMax*.

12.2 Saving an image

12.2.1 General

You can save images to the memory card.

12.2.2 Procedure

Follow this procedure:

1. To save an image, push the Save button.

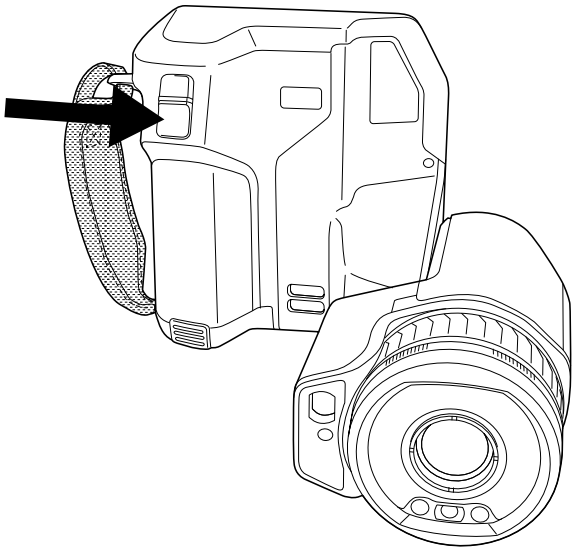

Note Depending on the settings in (*Settings*) > *Save options & storage*, the following may happen:

- A preview image is displayed before the image is saved.
- An annotation tool or the annotation menu is displayed when the image has been saved.

12.3 Previewing an image

12.3.1 General

You can preview an image before you save it. This enables you to see if the image contains the information you want before you save it. You can also adjust and edit the image.

Note The camera must be configured to display a preview image before saving. Select (*Settings*) > *Save options & storage* > *Preview image before saving* = *On*.

12.3.2 Procedure

Follow this procedure:

1. To preview an image, push the Save button. This displays the preview.
2. Manual image adjustment mode is now active. For image adjustment instructions, see section 14.3 *Adjusting the infrared image*, page 59.
3. To edit the image, push the navigation pad. This displays a context menu. For editing instructions, see section 12.5 *Editing a saved image*, page 50.
4. Do one of the following:
   - To save the image, push the Save button.
   - To exit preview mode without saving, push the back button .

12.4 Opening a saved image

12.4.1 General

When you save an image, the image file is stored on the memory card. To display the image again, open it from the image archive (*Gallery*).

12.4.2 Procedure

Follow this procedure:

1. Push the image archive button . This displays the *Gallery* with one or more folders.
2. Select a folder and push the navigation pad.
3. Select the image you want to view and push the navigation pad.
4. Do one or more of the following:
   - To view the previous/next image, push the navigation pad left/right.
   - To display a toolbar at the top of the screen, push the navigation pad. Do one or more of the following:
     - To switch between an infrared image and a visual image, select the icon and push the navigation pad.
     - To edit the image, delete the image, display information, or add annotations, select the icon and push the navigation pad. This displays a menu to the right.
   - To return to the folder overview, push the back button .
   - To return to the live image, push the image archive button .

12.5 Editing a saved image

12.5.1 General

You can edit a saved image. You can also edit an image in preview mode.

12.5.2 Procedure

Follow this procedure:

1. Push the image archive button . This displays the *Gallery* .
2. Select a folder and push the navigation pad.
3. Select the image you want to edit and push the navigation pad.
4. Push the navigation pad to display the top toolbar.
5. On the top toolbar, select the icon and push the navigation pad.
6. On the right toolbar, select the icon and push the navigation pad. This opens the image in edit mode.
7. Manual image adjustment mode is now active. For image adjustment instructions, see section 14.3 *Adjusting the infrared image*, page 59.
8. Push the navigation pad. This displays a context menu.
   - Select (*Cancel*) to exit edit mode.
   - Select (*Measurement parameters*) to change the global parameters.
   - Select (*Image mode*) to change the image mode.
   - Select (*Measurement*) to add a measurement tool.
   - Select (*Color*) to change the color palette or set a color alarm.
   - Select (*Save*) to save and exit edit mode.

12.5.3 Related topics

- 14.6 *Changing the measurement parameters*, page 64.
- 15 *Working with image modes*, page 67.
- 16 *Working with measurement tools*, page 71.
- 14.5 *Changing the color palettes*, page 63.
- 17 *Working with color alarms and isotherms*, page 81.

12.6 Displaying the image information

12.6.1 General

The image information consists of items such as the date, emissivity, and atmospheric temperature. When you save an image, the image information is saved in the image file and can be viewed in the image archive (*Gallery*).

12.6.2 Procedure

Follow this procedure:

1. Push the image archive button . This displays the *Gallery* .

2. Select a folder and push the navigation pad.
3. Select an image and push the navigation pad.
4. Push the navigation pad to display the top toolbar.
5. On the top toolbar, select the icon and push the navigation pad.
6. On the right toolbar, select the icon and push the navigation pad. This displays the image information.

12.7 Zooming an image

12.7.1 General

You can zoom an image by using the camera's digital zoom function. You can do this on live images and on saved images in edit mode.

The digital zoom factor is displayed at the top of the screen.

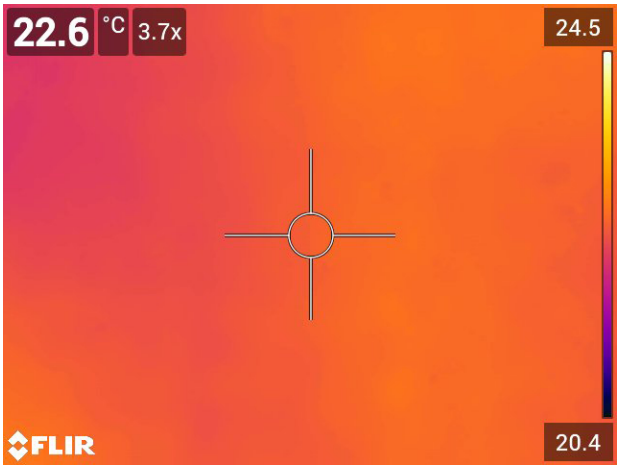

12.7.2 Procedure

Follow this procedure:

1. To digitally zoom an image, do the following:
   - Zoom in: Touch the screen with two fingers and spread the fingers apart.
   - Zoom out: Touch the screen with two fingers and pinch the fingers together.

12.8 Deleting images

You can delete image files from the memory card. For more information, see sections 13.8 *Deleting an image or video file*, page 56, 13.9 *Deleting multiple files*, page 56, and 13.10 *Deleting all files*, page 57.

12.9 Resetting the image counter

12.9.1 General

You can reset the numbering of the image filenames.

Note To prevent image files being overwritten, the new counter value will be based on the highest existing filename number in the image archive. To ensure that the counter is reset to 0001, insert an empty memory card before resetting the counter.

12.9.2 Procedure

Follow this procedure:

1. Push the navigation pad to display the menu system.
2. Select (*Settings*) and push the navigation pad. This displays the *Settings* menu.
3. Use the navigation pad to select *Device settings* > *Reset options* > *Reset image counter...*.
4. Push the navigation pad. This displays a dialog box.
5. To reset the counter, select *Reset* and push the navigation pad.

13 Working with the image archive

13.1 General

When you save an image or video clip, the camera stores the image/video file in the image archive on the memory card. You can open an image in the image archive and, for example, select another image mode, apply color alarms, and add measurement tools. You can also open and play saved video clips.

In the camera, the image archive is called *Gallery*. The *Gallery* can include one or several folders. New images and video clips will be saved to the active folder, at the top of the *Gallery*. You can create new folders, rename a folder, change the active folder, move files between the folders, and delete folders.

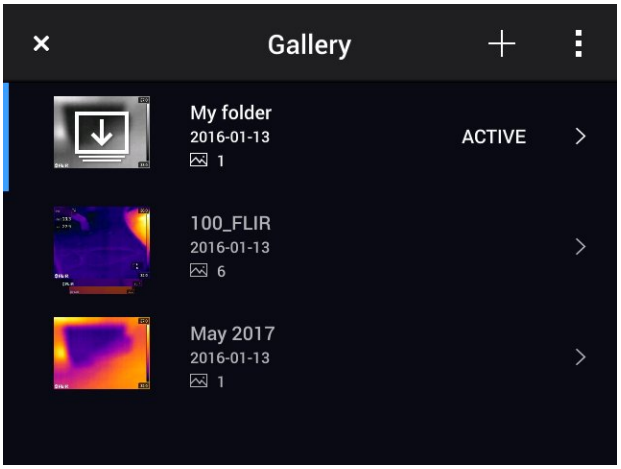

13.1.1 Managing folders via soft button

The soft button can be used to open a menu, where you can create new folders and change the active folder.

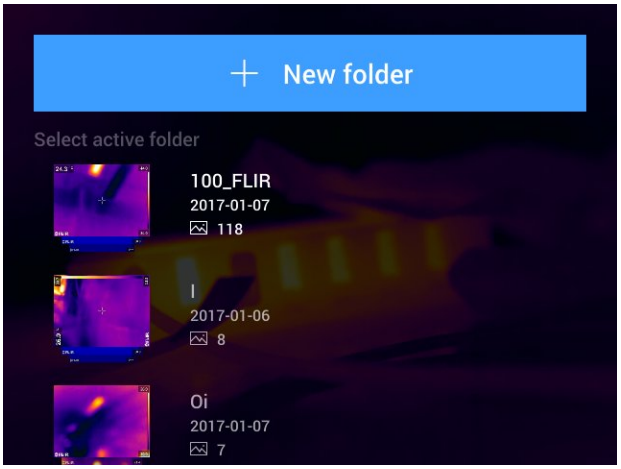

13.2 Opening image and video files

Follow this procedure:

1. Push the image archive button . This displays the *Gallery* with one or more folders.
2. Select a folder and push the navigation pad.
3. Select the image or video clip you want to view and push the navigation pad.
4. To view the previous/next image or video clip, push the navigation pad left/right.
5. To return to the folder overview, push the back button .
6. To return to the *Gallery*, push the back button again.

13.3 Creating a new folder

Follow this procedure:

1. Push the image archive button . This displays the *Gallery* .
2. On the top toolbar, select the icon and push the navigation pad.
3. A soft keyboard is displayed, where you can enter the name of the folder by touching the screen.
4. When completed, touch *Done* on the soft keyboard.
5. The new folder automatically becomes the active folder and appears at the top of the *Gallery*.

Note You can also create a new folder via the soft button .

13.4 Renaming a folder

You can change the name of the folders in the archive. The active folder cannot be renamed.

Follow this procedure:

1. Push the image archive button . This displays the *Gallery* .
2. On the top toolbar, select the icon and push the navigation pad.
3. Select the folder to rename and push the navigation pad.
4. On the right toolbar, select the Aa icon and push the navigation pad.
5. A soft keyboard is displayed, where you can enter the new name of the folder by touching the screen.
6. When completed, touch *Done* on the soft keyboard.

13.5 Changing the active folder

13.5.1 General

New images and video clips are saved to the active folder.

13.5.2 Procedure

Follow this procedure:

1. Push the image archive button . This displays the *Gallery* .
2. On the top toolbar, select the icon and push the navigation pad.
3. Select the folder that new images and video clips should be saved to and push the navigation pad. This marks the selected folder with a tick.
4. On the right toolbar, select the icon and push the navigation pad.
5. The selected folder is moved to the top of the *Gallery*.

Note You can also change the active folder via the soft button .

13.6 Moving files between folders

Follow this procedure:

1. Push the image archive button . This displays the *Gallery* .
2. Select a folder and push the navigation pad.
3. On the top toolbar, select the icon and push the navigation pad.
4. Use the navigation pad to select the image and video items you want to move. You can also select the items by touching the screen. Selected items are marked with a tick.

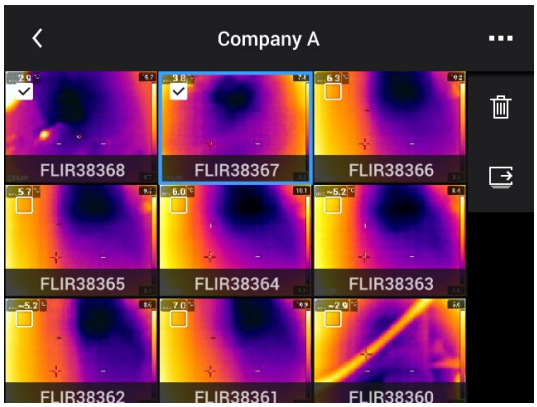

5. On the right toolbar, select the icon and push the navigation pad.
6. Select the destination folder for the selected items and push the navigation pad.

13.7 Deleting a folder

You can delete a folder in the archive. The active folder cannot be deleted.

Follow this procedure:

1. Push the image archive button . This displays the *Gallery* .
2. On the top toolbar, select the icon and push the navigation pad.
3. Select the folder to delete and push the navigation pad.
4. On the right toolbar, select the icon and push the navigation pad. This displays a dialog box.

5. To delete the folder, select *Delete* and push the navigation pad.

13.8 Deleting an image or video file

13.8.1 General

You can delete an image or video file from the image archive.

Note When deleting an image file, both images in the image file (thermal and visual) will be deleted.

13.8.2 Procedure

Follow this procedure:

1. Push the image archive button . This displays the *Gallery* .
2. Select a folder and push the navigation pad.
3. Select the image or video clip you want to delete and push the navigation pad.
4. Push the navigation pad to display the top toolbar.
5. On the top toolbar, select the icon and push the navigation pad.
6. On the right toolbar, select the icon and push the navigation pad. This displays a dialog box.
7. To delete the image, select *Delete* and push the navigation pad.

13.9 Deleting multiple files

13.9.1 General

You can delete multiple image and video files from the image archive.

13.9.2 Procedure

Follow this procedure:

1. Push the image archive button . This displays the *Gallery* .
2. Select a folder and push the navigation pad.
3. On the top toolbar, select the icon and push the navigation pad.

4. Use the navigation pad to select the image and video items you want to delete. You can also select the items by touching the screen. Selected items are marked with a tick.

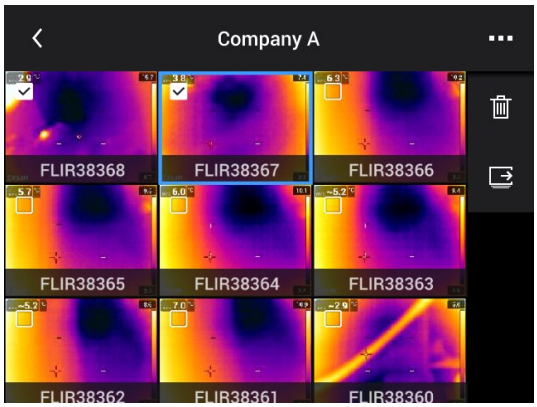

5. On the right toolbar, select the icon and push the navigation pad. This displays a dialog box.
6. To delete the selected items, select *Delete* and push the navigation pad.

13.10 Deleting all files

13.10.1 General

You can delete all image and video files from the memory card.

13.10.2 Procedure

Follow this procedure:

1. Push the navigation pad to display the menu system.
2. Select (*Settings*) and push the navigation pad. This displays the *Settings* menu.
3. Use the navigation pad to select *Save options & storage* > *Delete all saved files...* .
4. Push the navigation pad. This displays a dialog box.
5. To permanently delete all saved files, select *Delete* and push the navigation pad.

14 Achieving a good image

14.1 General

A good image depends on several different functions and settings, although some functions and settings affect the image more than others.

These are the functions and settings that you need to experiment with:

- Adjusting the infrared camera focus.
- Adjusting the infrared image (automatically or manually).
- Selecting a suitable temperature range.
- Selecting a suitable color palette.
- Changing the measurement parameters.
- Performing a non-uniformity correction (NUC).

The following sections explain how to work with these functions and settings.

In some situations, you may also want to hide the overlay graphics for a better view.

14.2 Adjusting the infrared camera focus

It is very important to adjust the focus correctly. Incorrect focus adjustment affects how the image modes work. It also affects the temperature measurement.

14.2.1 Manual focus

You can adjust the focus manually by rotating the focus ring. For more information, see section 11.6 *Adjusting the infrared camera focus manually*, page 31.

14.2.2 Autofocus

You can autofocus the infrared camera by pushing the Autofocus button. For more information, see section 11.7 *Autofocusing the infrared camera*, page 31.

⚠ **WARNING**
When the camera is set to autofocusing with the laser method (*Settings* > *Device settings* > *Focus* > *Auto focus* >*Laser*), do not point the camera at the face of a person when you use the autofocus function. The laser beam can cause eye irritation.

Note You can also assign the autofocus function to one of the programmable buttons P. For more information, see section 11.13 *Assigning functions to the programmable buttons*, page 37.

14.2.3 Continuous autofocus

The infrared camera can be set up to perform continuous autofocusing. For more information, see section 11.8 *Continuous autofocus*, page 32.

⚠ **WARNING**
Do not point the camera at the face of a person when the continuous autofocus function is on. The camera uses laser distance measurements (that are continuous) for the focus adjustments. The laser beam can cause eye irritation.

Note For large lenses that cover the laser transmitter and receiver, the laser functionality is disabled. This means that continuous autofocus is not available.

14.3 Adjusting the infrared image

14.3.1 General

An infrared image can be adjusted automatically or manually.

In automatic mode, the camera continuously adjusts the level and span for the best image presentation. The colors are distributed based on the thermal content of the image (histogram color distribution). The temperature scale to the right of the screen shows the upper and lower temperatures of the current span.

In manual mode, you can adjust the temperature scale to values close to the temperature of a specific object in the image. This will make it possible to detect anomalies and smaller temperature differences in the part of the image of interest. In manual mode, the colors are distributed evenly from the lowest to the highest temperature (linear color distribution).

In manual mode, you can adjust the image by touching the screen or by using the navigation pad. For more information, see sections 14.3.2 *Manual adjustment by touching the screen*, page 60 and 14.3.3 *Manual adjustment by using the navigation pad*, page 61.

- In live mode, touch the soft button to switch between automatic and manual image adjustment modes.
- In preview/edit mode, manual image adjustment mode is active.

Note You can also assign image adjustment functions to the programmable buttons. For more information, see section 11.13 *Assigning functions to the programmable buttons*, page 37.

- *Switch between auto and manual*: Allows you to switch between automatic and manual image adjustment modes.
- *Auto adjust the manual temperature scale*: Allows you to perform an automatic adjustment of the image while remaining in manual image adjustment mode.

14.3.1.1 Example 1

Here are two infrared images of a building. In the left image, which is auto-adjusted, the large temperature span between the clear sky and the heated building makes a correct analysis difficult. You can analyze the building in more detail if you change the temperature scale to values close to the temperature of the building.

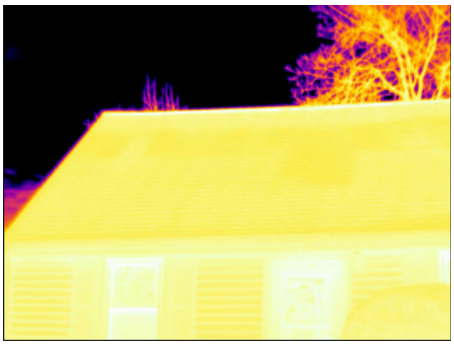

Automatic

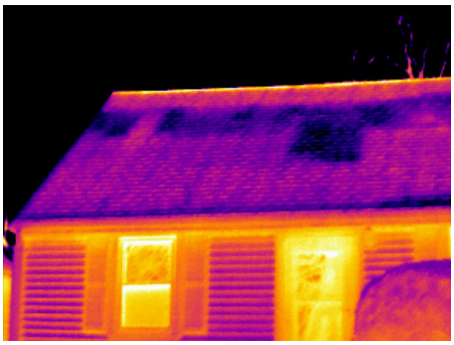

Manual

14.3.1.2 Example 2

Here are two infrared images of an isolator in a power line. To make it easier to analyze the temperature variations in the isolator, the temperature scale in the right image has been changed to values close to the temperature of the isolator.

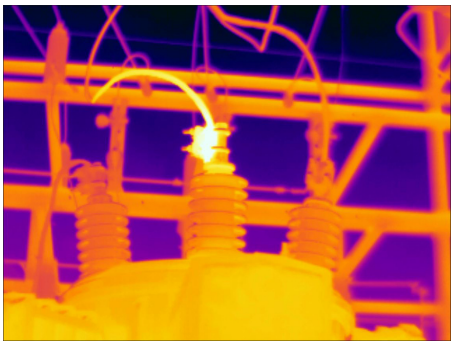	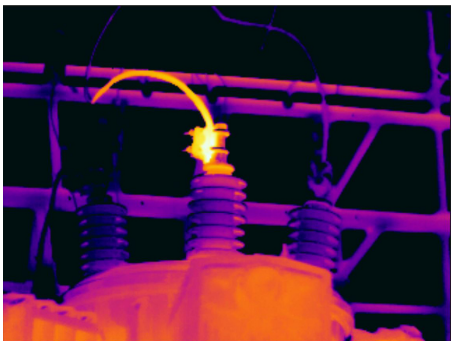
Automatic	Manual

14.3.2 Manual adjustment by touching the screen

14.3.2.1 General

The touch functionality for manual image adjustments is enabled/disabled by a setting. Select (*Settings*) > *Device settings* > *User interface options* > *Manual adjustment using touch* > *On/Off*.

When manual image adjustment mode is active, an adjustment wheel is displayed to the right of the temperature scale. (Applicable when the manual adjustment by touch functionality is enabled.)

Figure 14.1 Manual adjustment mode active

14.3.2.2 Procedure

Follow this procedure:

1. In live mode, touch the soft button to enter manual image adjustment mode.

2. To simultaneously change the temperature scale minimum and maximum limits, place your finger on the screen and move it up/down.
3. To change the minimum limit or the maximum limit, do the following:
   - Touch the maximum or minimum temperature that you want to change.
   - Place your finger on the screen and move it up/down to change the value of the highlighted temperature.

14.3.2.3 Auto-adjusting the image in manual mode

In manual image adjustment mode, you can auto-adjust the image by touching the screen. The image will be auto-adjusted based on the thermal content of the area around the touched point. The top and bottom levels in the temperature scale will be set to the maximum and minimum temperatures in that area. By using the color information only for the relevant temperatures, you will get more details in your area of interest.

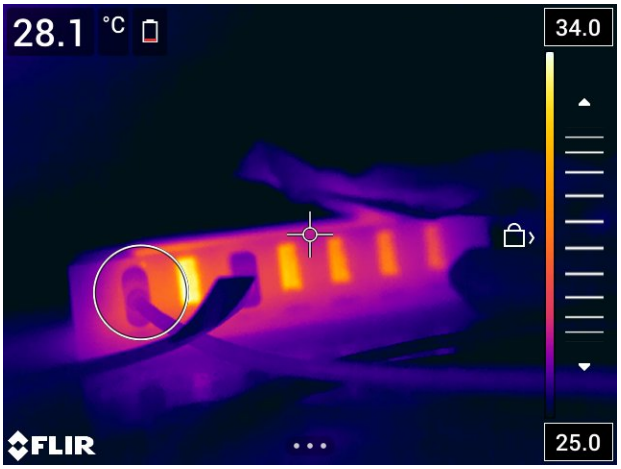

14.3.2.4 Locking the touch screen

When you have adjusted the image to levels that allow you to study your area of interest, you can lock the touch screen to prevent further unintentional adjustments.

To lock the screen, touch the icon to the left of the temperature scale.

To unlock the screen, touch the icon to the left of the temperature scale.

Note If you switch to automatic image adjustment mode, the screen automatically unlocks and your manual adjustments are lost.

14.3.3 Manual adjustment by using the navigation pad

14.3.3.1 Manual adjustment modes

There are two different settings for the manual adjustment mode (applicable for the navigation pad only):

- *Level, Span*: With this setting, you can manually adjust the level and span by using the navigation pad.
- *Level, Max, Min*: With this setting, you can manually adjust the level by using the navigation pad. You can also change the upper and lower temperatures individually.

Select the type of manual image adjustment mode under (*Settings*) > *Device settings* > *User interface options* > *Manual adjustment mode*.

14.3.4 Manual adjustment in *Level, Span* mode

Note This procedure assumes that you have configured the camera for manual image adjustments in *Level, Span* mode. Select *Settings* > *Device settings* > *User interface options* > *Manual adjustment mode* = *Level, Span*.

Follow this procedure:

1. In live mode, touch the soft button to enter manual image adjustment mode.
2. Push the navigation pad up/down to increase/decrease the level.
3. Push the navigation pad left/right to increase/decrease the span.

14.3.5 Manual adjustment in *Level, Max, Min* mode

Note This procedure assumes that you have configured the camera for manual image adjustments in *Level, Max, Min* mode. Select *Settings* > *Device settings* > *User interface options* > *Manual adjustment mode* = *Level, Max, Min*.

Follow this procedure:

1. In live mode, touch the soft button to enter manual image adjustment mode.
2. To simultaneously change the temperature scale minimum and maximum limits, push the navigation pad up/down.
3. To change the minimum limit or the maximum limit, do the following:
   - Push the navigation pad left/right to select (highlight) the maximum or minimum temperature.
   - Push the navigation pad up/down to change the value of the highlighted temperature.

14.4 Changing the camera temperature range

14.4.1 General

The camera is calibrated for different temperature ranges. Available temperature range options are dependent on the camera model.

For accurate temperature measurements, you must change the *Camera temperature range* setting to suit the expected temperature of the object you are inspecting.

Note For more information, see section 35 *About calibration*, page 223.

14.4.2 Procedure

Follow this procedure:

1. Push the navigation pad to display the menu system.
2. Select (*Settings*) and push the navigation pad. This displays the *Settings* menu.
3. Select *Camera temperature range* and push the navigation pad. This displays a dialog box.
4. Select the appropriate temperature range and push the navigation pad.

Note You can also assign the function *Switch temperature range* to one of the programmable buttons P. For more information, see section 11.13 *Assigning functions to the programmable buttons*, page 37.

14.5 Changing the color palettes

14.5.1 General

You can change the color palette that the camera uses to display different temperatures. A different palette can make it easier to analyze an image.

This table explains the different types of color palettes.

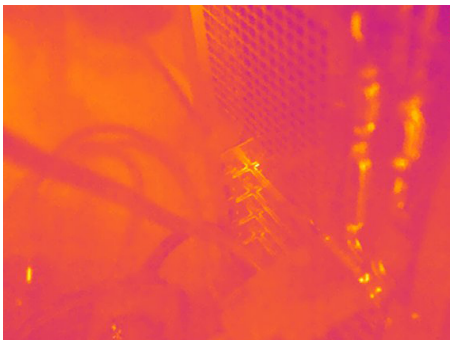 Iron	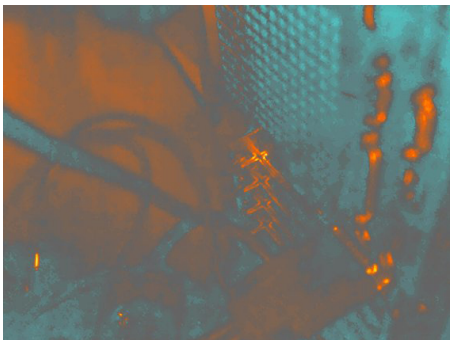 Arctic
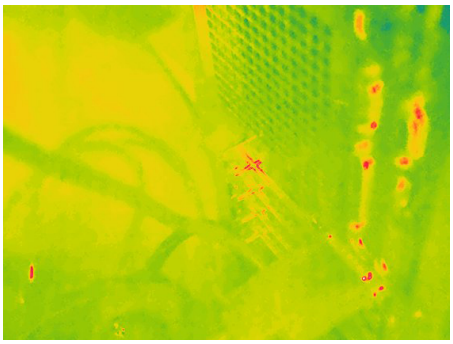 Rainbow	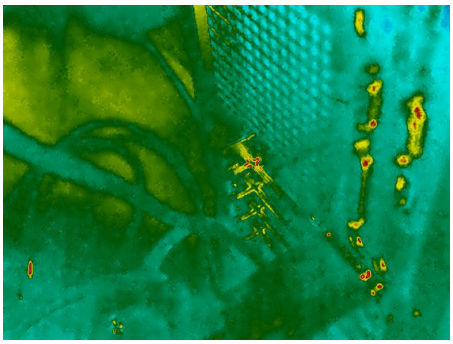 Rainbow high contrast

White hot	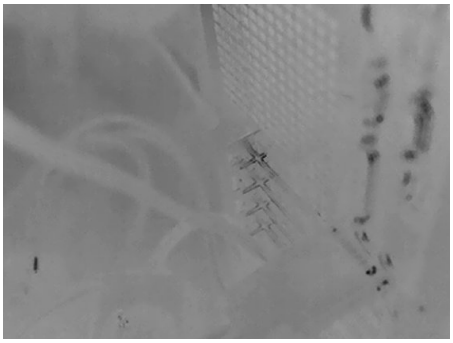 Black hot
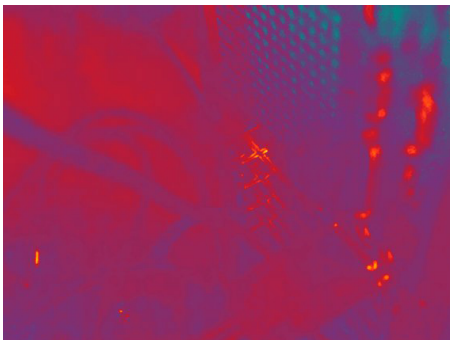 Lava	

14.5.2 Procedure

Follow this procedure:

1. Push the navigation pad to display the menu system.
2. Select (*Color*) and push the navigation pad. This displays a submenu.
3. Use the navigation pad to select a different palette.
4. Push the navigation pad to confirm and exit the menu mode.

14.6 Changing the measurement parameters

For accurate measurements, it is important to set the measurement parameters:

- *Emissivity*.
- *Reflected temperature*.
- *Object distance*.
- *Atmospheric temperature*.
- *Relative humidity*.
- *External IR window compensation*.

Emissivity is the most important measurement parameter to set correctly. If the *Emissivity* is set to a low value, the *Reflected temperature* also becomes important. The parameters *Object distance*, *Atmospheric temperature*, and *Relative humidity* are relevant for longer distances. The *External IR window compensation* must be activated if a protective window or external lens is used.

You can set the measurement parameters globally. You can also change the *Emissivity*, *Reflected temperature*, and *Object distance* parameters locally for a measurement tool.

For more information, see section 16.5 *Changing the measurement parameters*, page 73.

14.7 Performing a non-uniformity correction (NUC)

14.7.1 General

When the thermal camera displays *Calibrating...* it is performing what in thermography is called a ”non-uniformity correction” (NUC). An NUC is *an image correction carried out by the camera software to compensate for different sensitivities of detector elements and other optical and geometrical disturbances*[4]. For more information, see section 35 *About calibration*, page 223.

An NUC is performed automatically, for example at start-up, when changing a measurement range, or when the environment temperature changes.

You can also perform an NUC manually. This is useful when you have to perform a critical measurement with as little image disturbance as possible. You may, for example, want to perform a manual calibration just before you start recording a video sequence.

14.7.2 Performing an NUC manually

14.7.2.1 Procedure

Follow this procedure:

1. To perform a manual NUC, push and hold down the image archive button for more than 2 seconds.

Note You can also assign the function *Calibrate* to the one of the programmable buttons P. For more information, see section 11.13 *Assigning functions to the programmable buttons*, page 37.

14.8 Hiding all overlay

14.8.1 General

The camera overlay consists of overlay graphics and image overlay information. The overlay graphics include items such as measurement tool symbols, result tables, and status icons. The image overlay information, which you activate on the *Settings* menu, provides additional information such as the date, emissivity, and atmospheric temperature. For more information, see section 9.6 *Image overlay information*, page 23.

You can hide all camera overlay by touching the soft button .

Note You can also assign the function *Hide image overlay graphics* to one of the programmable buttons P. For more information, see section 11.13 *Assigning functions to the programmable buttons*, page 37.

4. Definition from the European standard EN 16714-3:2016, Non-destructive Testing—Thermographic Testing—Part 3: Terms and Definitions.

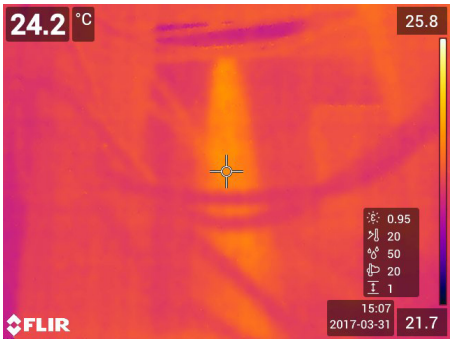 Image with camera overlay and image overlay information.	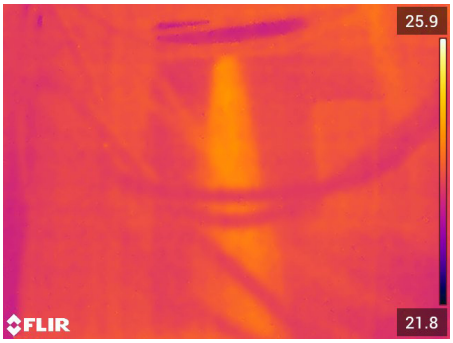 Image with all overlay hidden.

15 Working with image modes

15.1 General

The camera can capture both thermal and visual images at the same time. By choosing the image mode, you select which type of image to display on the screen.

The camera supports the following image modes:

- *Thermal*: An infrared image is displayed.
- *Thermal MSX* (Multi Spectral Dynamic Imaging): The camera displays an infrared image where the edges of the objects are enhanced with visual image details.
- *Picture in picture*: An infrared image frame is displayed on top of the visual image.
- *Digital camera*: The visual image captured by the digital camera is displayed.
- *Macro*: This mode enables the camera to focus on objects very close to the camera lens. An infrared image is displayed.

Note

- For the *Thermal MSX*, *Thermal*, and *Picture in picture* image modes, all thermal and visual information is stored when an image is saved. This means that you can edit the image later, in the image archive, or in FLIR Tools/Tools+ or FLIR Report Studio, and select any of the image modes.
- For the *Digital camera* image mode, a digital image with full resolution (5 MP) is stored when an image is saved. However, no thermal information is stored.
- You can choose to turn off the digital camera. This can, for example, be required in restricted areas and in confidential (e.g., doctor/patient) situations. Select (*Settings*) > *Save options & storage* > *Digital camera* = *Off*. When the digital camera is off, only the image mode *Thermal* is enabled.
- The *Thermal MSX*, *Thermal*, and *Picture in picture* image modes only work correctly for calibrated lenses. The lens that ships with the camera is factory calibrated. To calibrate a new lens, see section 11.16 *Calibrating the lens–camera combination*, page 42.
- When the *Macro* mode is selected, the laser is automatically disabled.
- The support for the *Macro* mode depends on the camera lens.
- In *Macro* mode, no visual information is saved.

15.2 Image examples

This table explains the different types of image modes.

Image mode	Image
Thermal	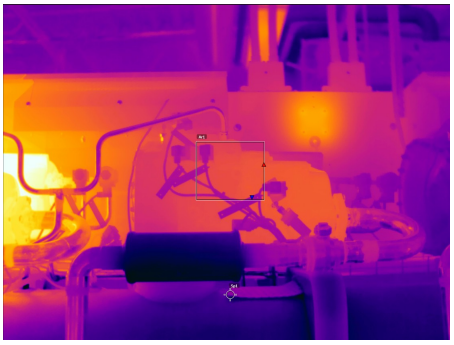
Thermal MSX	
Picture in picture	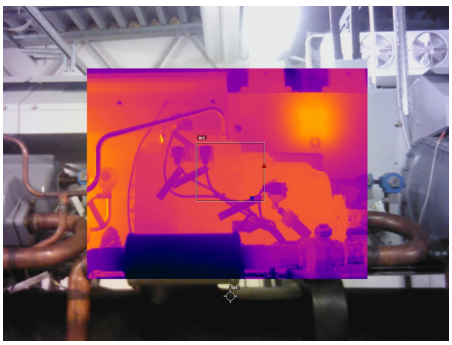

Image mode	Image
Digital camera	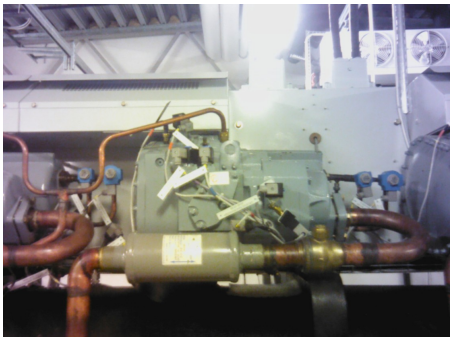
Macro	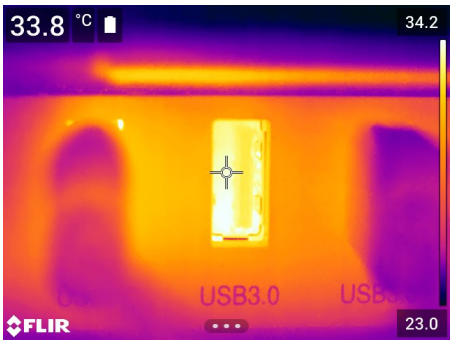

15.3 Selecting an image mode

Follow this procedure:

1. Push the navigation pad to display the menu system.
2. Select (*Image mode*) and push the navigation pad. This displays a submenu.
3. Use the navigation pad to select one of the following:
   - (*Thermal MSX*).
   - (*Thermal*).
   - (*Picture in picture*).
   - (*Digital camera*).
   - (*Macro*).

   Note

   - If the *.csq video format is selected (*Settings* > *Save options & storage* > *Video compression*) and the recording mode *Video* is selected, it will only be possible to select the image modes *Thermal* and *Macro*.
   - If the digital camera is disabled (*Settings* > *Save options & storage* > *Digital camera* = *Off*), it will only be possible to select the image modes *Thermal* and *Macro.*
4. Push the navigation pad to confirm and exit the menu mode.

5. If *Picture in picture* mode is selected, you can at this point move and resize the infrared image frame using the touch screen.

16 Working with measurement tools

16.1 General

To measure a temperature, you can use one or more measurement tools, e.g., a spotmeter or a box.

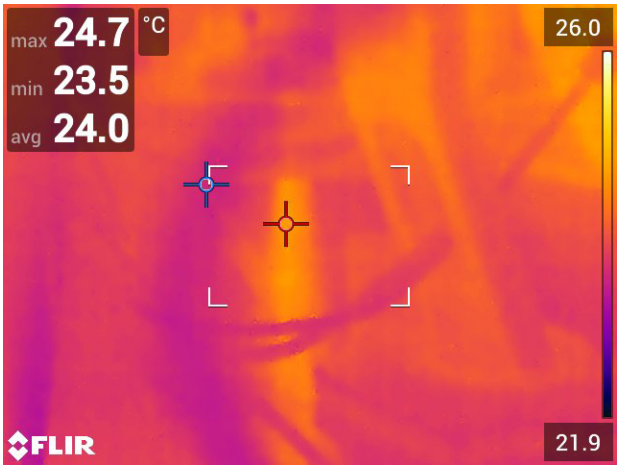

16.2 Adding/removing measurement tools

Follow this procedure:

1. Push the navigation pad to display the menu system.
2. Select (*Measurement*) and push the navigation pad. This displays a submenu.
3. Use the navigation pad to select one of the following:
   - Select (*No measurements*) to remove all tools.
   - Select (*Center spot*) to add a center spot.
   - Select (*Hot spot*) to add a hot spot detection within a box area.
   - Select (*Cold spot*) to add a cold spot detection within a box area.
   - Select (*User preset 1*) to add user preset 1. (Not available in all camera models.)
   - Select (*User preset 2*) to add user preset 2. (Not available in all camera models.)
4. Push the navigation pad to confirm and exit the menu mode.

16.3 Editing user presets

16.3.1 General

A user preset is a measurement tool, or a group of measurement tools, with predefined characteristics.

16.3.2 Procedure

Follow this procedure:

1. Push the navigation pad to display the menu system.
2. Select (*Measurement*) and push the navigation pad. This displays a submenu.
3. Use the navigation pad to select (*User preset 1*) or (*User preset 2*).
4. Push and hold the center of the navigation pad. This displays the *Edit user preset* menu.
5. Select (*Add measurement*) and push the navigation pad. This displays a submenu.
6. Use the navigation pad to select one of the following:
   - Select (*Add spot*) to add a spot.
   - Select (*Add box*) to add a box.
   - Select (*Add circle*) to add a circle.
   - Select (*Add delta*) to set up a differential calculation.
7. Push the navigation pad. This displays the measurement tool on the screen.
8. Push the navigation pad. This displays a context menu, where you can select one or more of the following actions (depending on the type of tool):
   - Remove the tool.
   - Resize, move, center, and rotate the tool.
   - Set alarms.
   - Display maximum, minimum, average, and area values.
   - Set local parameters.
   - When completed, select (*Done*) and push the navigation pad.
9. When all measurement tools have been added, select (*Save as user preset*).
10. Push the navigation pad to confirm and exit the menu mode.

16.4 Moving and resizing a measurement tool

16.4.1 General

You can move and resize a measurement tool.

Note When you select another measurement tool, any changes of position and size of the current tool will be lost. If you wish to keep the position and size settings, use the user preset feature, see section 16.3 *Editing user presets*, page 71.

16.4.2 Moving a spot

Note You can also move the spot by touching the screen.

Follow this procedure:

1. To select the measurement tool, touch the tool on the screen. The tool is now displayed with one or more handles.

2. Push the navigation pad—or touch and hold the tool. This displays a context menu.
3. To move the spot, do the following:

   3.1. Select (*Move spot*) and push the navigation pad.

   3.2. Push the navigation pad up/down and left/right to move the spot.

4. To center the spot, select *Center spot* and push the navigation pad.
5. When completed, push the navigation pad and select (*Done*).
6. Push the navigation pad to confirm and exit the menu mode.

16.4.3 Moving and resizing a box or circle tool

Note You can also move and resize the measurement tool by touching the screen.

Follow this procedure:

1. To select the measurement tool, touch the tool on the screen. The tool is now displayed with one or more handles.

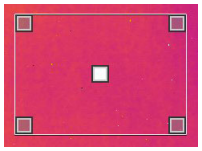

2. Push the navigation pad—or touch and hold the tool. This displays a context menu.
3. Select (*Move/resize*) and push the navigation pad. This displays a submenu.
4. Use the navigation pad to select one of the following:

   - Select (*Resize*) to change the size of the tool.
   - Select (*Move*) to move the tool.
   - Select (*Center box/circle*) to center the box or circle tool.

5. Push the navigation pad up/down and left/right to resize or move the tool.
6. When completed, push the navigation pad and select (*Done*).
7. Push the navigation pad to confirm and exit the menu mode.

16.5 Changing the measurement parameters

16.5.1 General

For accurate measurements, it is important to set the measurement parameters.

Note During normal operation there is typically no need to change the default measurement parameters, see section 16.5.3 *Recommended values*, page 74.

16.5.2 Types of parameters

The camera can use these measurement parameters:

- *External IR window compensation*, i.e., the temperature of any protective windows, external lenses (e.g., the close-up lens), etc., that are set up between the camera and the object of interest. If no protective window, protective shield, or external lens is used, this value is irrelevant and should be left inactive.

- *Object distance*, i.e., the distance between the camera and the object of interest.

  Note The camera can be configured to automatically measure the distance when an image is saved. With this setting, the *Object distance* parameter in the image data is automatically updated with the measured distance when an image is saved. (There is no effect on the *Object distance* setting in live mode.) For more information, see section 8.4 *Laser distance meter and laser pointer*, page 18.
- *Atmospheric temperature*, i.e., the temperature of the air between the camera and the object of interest.
- *Relative humidity*, i.e., the relative humidity of the air between the camera and the object of interest.
- *Reflected temperature*, which is used when compensating for the radiation from the surroundings reflected by the object into the camera. This property of the object is called “reflectivity.”
- *Emissivity*, i.e., how much radiation an object emits, compared with the radiation of a theoretical reference object at the same temperature (called a “blackbody”). The opposite of emissivity is reflectivity. The emissivity determines how much of the radiation originates from the object as opposed to being reflected by it.

  Note There is an *Emissivity mode* setting, which you can use to enter the emissivity by material instead of by value. Select (*Settings*) > *Device settings* > *User interface options* > *Emissivity mode* > *Select from materials table*.

Emissivity is the most important measurement parameter to set correctly. If the *Emissivity* is set to a low value, the *Reflected temperature* also becomes important. The parameters *Object distance*, *Atmospheric temperature*, and *Relative humidity* are relevant for longer distances. The *External IR window compensation* must be activated if a protective window or external lens is used.

16.5.3 Recommended values

If you are unsure about the values, the following are recommended:

Object distance	1.0 m (3.3 ft.)
Atmospheric temperature	20°C (69°F)
Relative humidity	50%
Reflected temperature	20°C (69°F)
Emissivity	0.95

16.5.4 Procedure

You can set the measurement parameters globally. You can also change the *Emissivity*, *Reflected temperature*, and *Object distance* parameters locally for a measurement tool.

Local parameters are normally only effective for a fixed setup, where each measurement tool is set for a specific object of interest. For a general handheld application, the global parameters are usually sufficient.

Note *Emissivity* and *Reflected temperature* are the two most important measurement parameters to set correctly in the camera.

16.5.4.1 Setting global parameters

Follow this procedure:

1. Push the navigation pad to display the menu system.

2. Select (*Measurement parameters*) and push the navigation pad. This displays a submenu.
3. Use the navigation pad to select one or more of the global measurement parameters:
   - (*External IR window compensation*).
   - (*Object distance*).
   - (*Atmospheric temperature*).
   - (*Relative humidity*).
   - (*Reflected temperature*).
   - (*Emissivity*).
4. Push the navigation pad to display a dialog box.
5. Use the navigation pad to change the parameter.
6. Push the navigation pad to confirm and exit the menu mode.

16.5.4.2 Changing local parameters

You can change the local parameters for a measurement tool.

A *P* next to the measurement tool on the screen indicates that local parameters have been activated for the tool.

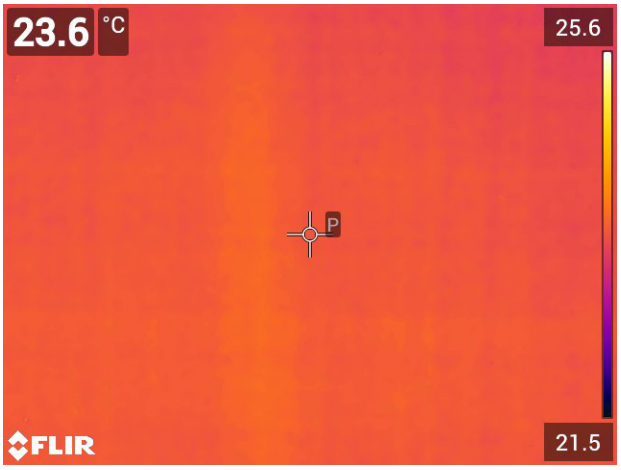

Follow this procedure:

1. To select the measurement tool, touch the tool on the screen. The tool is now displayed with one or more handles.
2. Push the navigation pad—or touch and hold the tool. This displays a context menu.
3. Select (*Use local parameters*).
4. Push the navigation pad. (icon with unfilled indicator) is displayed.
5. Push the navigation pad to activate the use of local parameters. (icon with filled indicator) is displayed together with a submenu.
6. Use the navigation pad to select one or more of the local measurement parameters.
7. Push the navigation pad to display a dialog box.

8. Use the navigation pad to change the parameter.
9. Push the navigation pad. This closes the dialog box.
10. When completed, push the navigation pad and select (*Done*).
11. Push the navigation pad to confirm and exit the menu mode.

Note When you select another measurement tool, the local parameters are reset. If you wish to keep the local parameter settings, use the user preset feature, see section 16.3 *Editing user presets*, page 71.

16.5.5 Related topics

For in-depth information about parameters, and how to correctly set the emissivity and reflected apparent temperature, see section 33 *Thermographic measurement techniques*, page 211.

16.6 Displaying values in the result table

16.6.1 General

For the box and circle tools, you can set the camera to display the maximum, minimum, average, and area values in the result table.

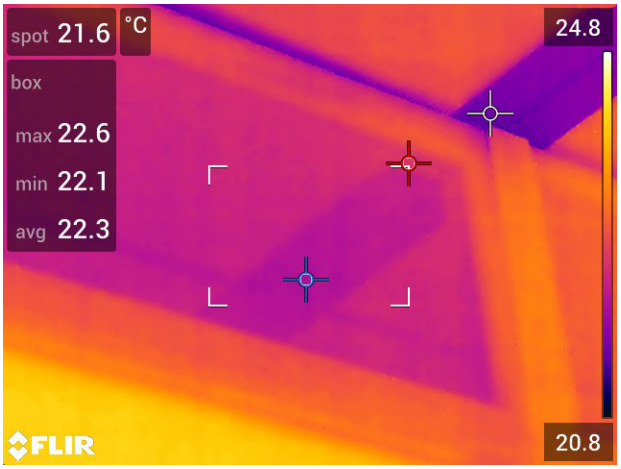

16.6.2 Procedure

Follow this procedure:

1. To select the measurement tool, touch the tool on the screen. The tool is now displayed with one or more handles.
2. Push the navigation pad—or touch and hold the tool. This displays a context menu.
3. Use the navigation pad to select (*Max/Min/Avg*).
4. Push the navigation pad. This displays a submenu.

5. Use the navigation pad to select one or more of the following:
   - Select (*Max*) to display the maximum value.
   - Select (*Min*) to display the minimum value.
   - Select (*Avg*) to display the average value.
   - Select (depending on the tool) or (*Area*) to display the area of an object within the measurement tool. Area measurements require that the laser is enabled (*Settings* > *Device settings* > *Lamp & laser* > *Enable lamp & laser*). For more information, see section 11.10 *Measuring areas*, page 34.
   - Select (*Max & min markers*) to display the maximum and minimum markers (the hot/cold spots).
6. Push the navigation pad to toggle the function between inactive and active:
   - When the icon with the unfilled indicator is displayed, the function is inactive.
   - When the icon with the filled indicator is displayed, the function is active.
7. When completed, push the navigation pad down to close the submenu.
8. Select (*Done*) and push the navigation pad.

16.7 Creating and setting up a difference calculation

16.7.1 General

A difference calculation gives the difference between the values of two known measurement results.

16.7.2 Procedure

Note

- You can set up a difference calculation when previewing an image, when defining user presets, or when editing an image in the archive.
- This procedure assumes that you have previously laid out at least one measurement tool on the screen.

16.7.2.1 Procedure

Follow this procedure:

1. To set up a difference calculation, do the following:
   - If you are defining user presets, select (*Add measurement*) and then select (*Add delta*).
   - If you are editing an image in the archive, select (*Measurement*) and then select (*Add delta*).

2. Push the navigation pad. This displays a dialog box where you can select the measurement tools that you want to use in the difference calculation. You can also select a fixed-temperature reference.
3. Push the navigation pad. The result of the difference calculation is now displayed on the screen.

16.8 Setting a measurement alarm

16.8.1 General

You can make the camera trigger an alarm when certain measurement conditions are met.

16.8.2 Types of alarm

You can choose between the following alarm types:

- *Above*: Triggers an alarm when the temperature is above the preset alarm temperature.
- *Below*: Triggers an alarm when the temperature is below the preset alarm temperature.

16.8.3 Alarm signals

When an alarm is set, the symbol is displayed in the result table.

When an alarm is triggered, the value in the result table is displayed in red (above alarm) or blue (below alarm) and the symbol (above alarm) or (below alarm) is blinking.

You can also set an audible alarm (there will be a “beep” when the alarm is triggered).

16.8.4 Procedure

There are different procedures for setting up an alarm for a spot, for a box or circle, and for a difference calculation.

16.8.4.1 Setting up an alarm for a spot

Follow this procedure:

1. To select the spot, touch the tool on the screen. The tool is now displayed with a frame.
2. Push the navigation pad—or touch and hold the tool. This displays a context menu.
3. Select (*Set alarm on spot*) and push the navigation pad. This displays a dialog box.

4. In the dialog box, you can define the settings for the alarm.
   - *Alarm condition*: The condition that triggers the alarm. Applicable values are *Above*, *Below*, or *Off*.
   - *Alarm limit*: The temperature value that will be the critical condition when an alarm is triggered or not.
   - *Alarm sound*: Applicable values are *Beep* or *No sound*.

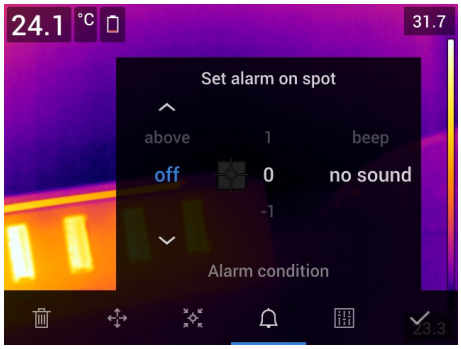

5. Push the navigation pad. This closes the dialog box.

16.8.4.2 Setting up an alarm for a box or circle

Note This procedure assumes that you have previously set the camera to display at least one value (maximum, minimum, or average) in the result table. For more information, see section 16.6 *Displaying values in the result table*, page 76.

Follow this procedure:

1. To select the measurement tool, touch the tool on the screen. The tool is now displayed with one or more handles.
2. Push the navigation pad—or touch and hold the tool. This displays a context menu.
3. Select (*Set alarm*) and push the navigation pad. This displays a dialog box.
4. In the dialog box, you can define the settings for the alarm.
   - *Alarm condition*: The condition that triggers the alarm. Applicable values are *Above*, *Below*, or *Off*.
   - *Select measurement*: Applicable settings are the values you have previously defined (*Max*, *Min*, and/or *Avg*).
   - *Alarm limit*: The temperature value that will be the critical condition when an alarm is triggered or not.
   - *Alarm sound*: Applicable values are *Beep* or *No sound*.

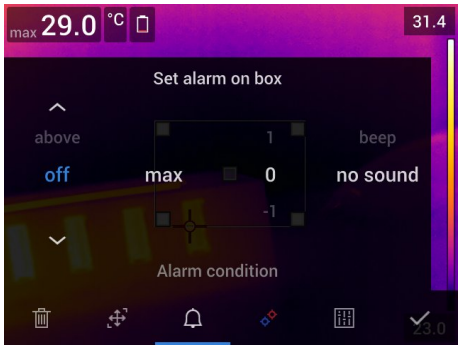

5. Push the navigation pad. This closes the dialog box.

16.8.4.3 Setting up an alarm for a difference calculation

Note

- You can set up an alarm for a difference calculation when defining user presets, or when editing an image in the archive.
- This procedure assumes that you have previously set up a difference calculation.

Follow this procedure:

1. To set up an alarm for a difference calculation, do the following:
   - If you are defining user presets, select (*Add measurement*).
   - If you are editing an image in the archive, select (*Measurement*).
2. Select (*Select*) and push the navigation pad. This displays a dialog box.
3. Select *Delta* and push the navigation pad. This displays a context menu.
4. Select (*Set alarm on delta*) and push the navigation pad. This displays a dialog box.
5. In the dialog box, you can define the settings for the alarm.
   - *Alarm condition*: The condition that triggers the alarm. Applicable values are *Above*, *Below*, or *Off*.
   - *Alarm limit*: The temperature value that will be the critical condition when an alarm is triggered or not.
   - *Alarm sound*: Applicable values are *Beep* or *No sound*.
6. Push the navigation pad. This closes the dialog box.

17 Working with color alarms and isotherms

17.1 Color alarms

17.1.1 General

By using color alarms (isotherms), anomalies can easily be discovered in an infrared image. The isotherm command applies a contrasting color to all pixels with a temperature above, below, or between the set temperature levels. The camera also features isotherm types that are specific to the building trade: condensation and insulation alarms.

You can make the camera trigger the following types of color alarms:

- *Above alarm*: This will apply a contrasting color to all pixels with a temperature above the specified temperature level.
- *Below alarm*: This will apply a contrasting color to all pixels with a temperature below the specified temperature level.
- *Interval alarm*: This will apply a contrasting color to all pixels with a temperature between two specified temperature levels.
- *Condensation alarm*: Triggers when the camera detects a surface where the relative humidity exceeds a preset value.
- *Insulation alarm*: Triggers when there is an insulation deficiency in a wall.

17.1.2 Image examples

This table explains the different color alarms (isotherms).

Color alarm	Image
Above alarm	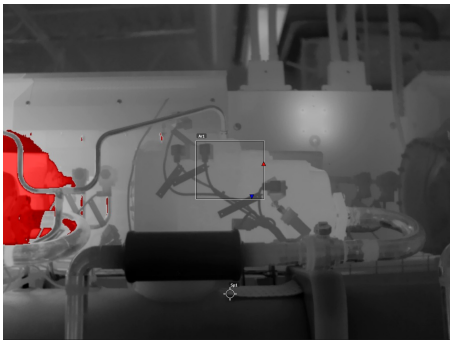
Below alarm	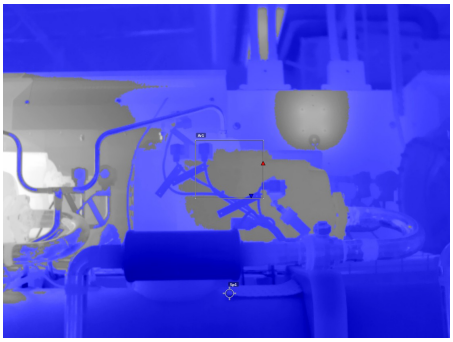

Color alarm	Image
Interval alarm	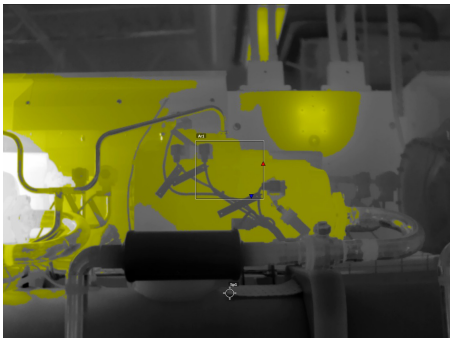
Condensation alarm	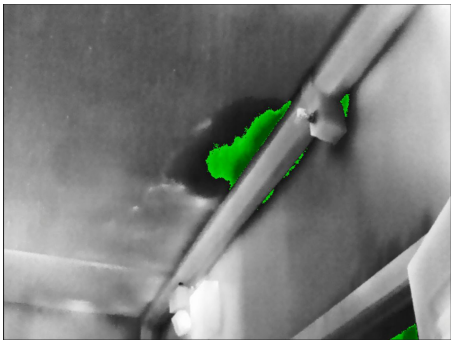
Insulation alarm	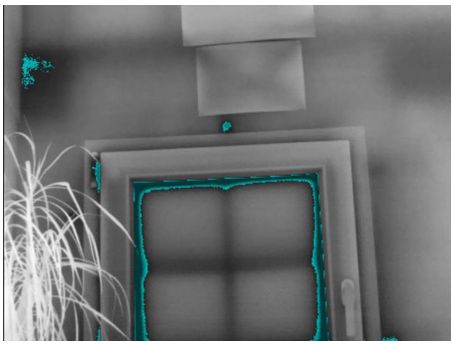

17.1.3 Setting up above, below, and interval alarms

Follow this procedure:

1. Push the navigation pad to display the menu system.
2. Select (*Color*) and push the navigation pad. This displays a submenu.
3. Use the navigation pad to select one of the following:
   - (*Above alarm*).
   - (*Below alarm*).
   - (*Interval alarm*).
4. Push the navigation pad. The threshold temperature is displayed at the top of the screen.

5. To change the threshold temperature, do the following:
   - For the *Interval alarm*, push the navigation pad left/right to select the low/high-temperature value.
   - Push the navigation pad up/down to change the threshold temperature.

17.1.4 Building isotherms

Note The Condensation and Insulation alarms are not supported by all camera models.

17.1.4.1 About the Condensation alarm

To detect areas with potential moisture problems, you can use the *Condensation alarm*. You can set the relative humidity above which the isotherm will colorize the image.

17.1.4.2 About the Insulation alarm

The *Insulation alarm* can detect areas where there may be an insulation deficiency in the building. It will trigger when the insulation level (which is called the thermal index in the camera) falls below a preset value of the energy leakage through a wall.

Different building codes recommend different values for the insulation level, but typical values are 60–80% for new buildings. Refer to your national building code for recommendations.

17.1.4.3 Setting up condensation and insulation alarms

Follow this procedure:

1. Push the navigation pad to display the menu system.
2. Select (*Color*) and push the navigation pad. This displays a submenu.
3. Use the navigation pad to select one of the following:
   - (*Condensation alarm*).
   - (*Insulation alarm*).

4. Push the navigation pad. This displays a dialog box where you can define the settings for the alarm.

   For the *Condensation alarm*, the following parameters can be set:

   - *Atmospheric temperature*: The current atmospheric temperature.
   - *Relative humidity*: The current relative humidity.
   - *Relative humidity limit*: The relative humidity level at which you want the alarm to be triggered. A relative humidity of 100% means that water vapor condenses from the air as liquid water (= dewpoint). A relative humidity of about 70% or above can cause mold.

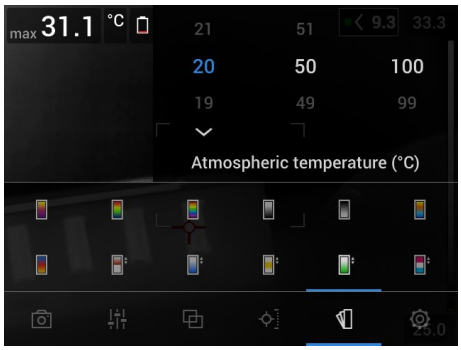

   For the *Insulation alarm*, the following parameters can be set:

   - *Indoor temperature*: The current indoor temperature.
   - *Outdoor temperature*: The current outdoor temperature.
   - *Thermal index*: The insulation level (an integer between 0 and 100).

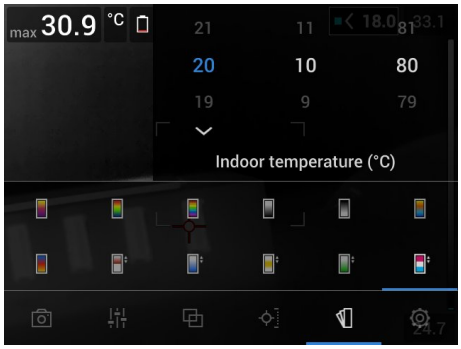

5. Push the navigation pad. This closes the dialog box.

18 Annotating images

18.1 General

You can save additional information with an infrared image by using annotations. Annotations make reporting and post-processing more efficient by providing essential information about the image, e.g., conditions and information about where an image is taken.

Annotations are added to the image file, and can be viewed and edited in the image archive, and also when moving files from the camera to reporting software on the computer.

- You can set the camera to display annotation tools when an image is saved. Select (*Settings*) > *Save options & storage* > *Add annotation after saving*.
- You can also add annotations to a saved image in the image archive.

Note This section describes the procedures for adding annotations to a saved image in the image archive. Adding annotations when saving an image works in a similar way.

18.2 Adding a note

18.2.1 General

You can add a text note to the image file. Using this feature, you can annotate images by entering free-form text.

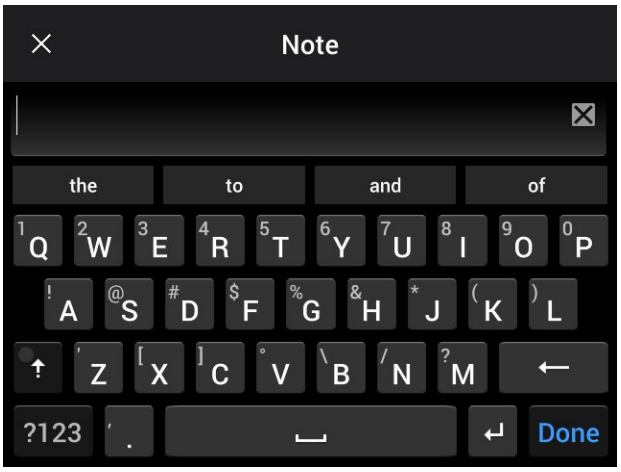

18.2.2 Procedure

Follow this procedure:

1. Open the image in the image archive.
2. Push the navigation pad to display the top toolbar.
3. On the top toolbar, select the icon and push the navigation pad.
4. On the right toolbar, select the icon and push the navigation pad.
5. A soft keyboard is displayed, where you can enter text by touching the screen.
6. When completed, touch *Done* on the soft keyboard.

18.3 Adding a text comment table

18.3.1 General

You can save a table with textual information to the image file. This feature is a very efficient way of recording information when you are inspecting a large number of similar objects. The idea behind using a table with textual information is to avoid filling out forms or inspection protocols manually.

The camera ships with an example text comment table template. You can also create your own templates. For more information, see section 18.3.3 *Creating a text comment table template*, page 87.

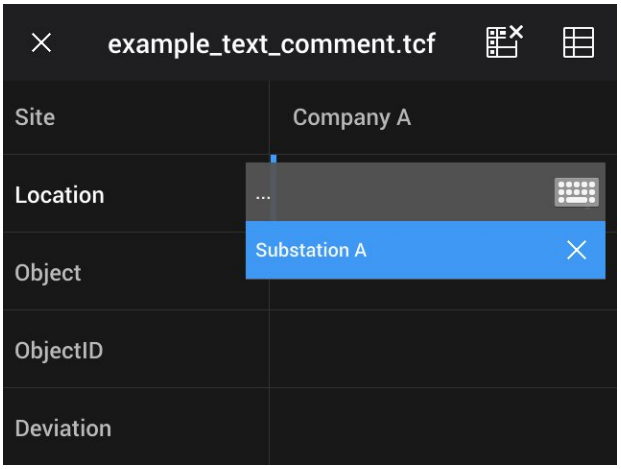

18.3.2 Procedure

Follow this procedure:

1. Open the image in the image archive.
2. Push the navigation pad to display the top toolbar.
3. On the top toolbar, select the icon and push the navigation pad.
4. On the right toolbar, select the icon and push the navigation pad. This displays a table.
5. (Optional step.) On the top toolbar, do one of the following:
   - To clear the content of the current table, select the icon and push the navigation pad.
   - To select another table template, select the icon and push the navigation pad.

6. For each row in the table, do the following:
   - Push the navigation pad. This displays the predefined values.
   - Push the navigation pad up/down to select a predefined value. Push the navigation pad to confirm.
   - Instead of selecting a predefined value, you can select the keyboard icon and enter other text by touching the screen.

     Note Text entered by the keyboard will be saved to the text comment table template. Next time you add a text comment table annotation, the entered text will be displayed as a predefined value.
7. When completed, select *Save & Exit* at the bottom of the table. Push the navigation pad to confirm.

18.3.3 Creating a text comment table template

18.3.3.1 General

You can create a text comment table template in different ways:

- Using FLIR Tools/Tools+, see section 18.3.3.2 *Creating a table template using FLIR Tools/Tools+*, page 87.
- Manually creating a text comment file (*.tcf), see section 18.3.3.3 *Manually creating a table template*, page 88.

18.3.3.2 Creating a table template using FLIR Tools/Tools+

Note If your camera uses an SD card that has been used in another camera, FLIR Tools/Tools+ cannot create proper templates for this camera. Please clear the SD card entirely before using tables templates from FLIR Tools/Tools+.

18.3.3.2.1 General

In FLIR Tools/Tools+, you can create text annotation templates on the *Templates* tab. These templates can either be transferred to the camera or used as a template during post-analysis in the program.

18.3.3.2.2 Procedure

Follow this procedure:

1. Click the *Templates* tab.
2. Click the *Add new text annotations template* toolbar button.
3. Create a name for the template.
4. Enter the desired fields and values. See the image below for examples.

5. Save the template.

6. Do one of the following:
   - To use the template in the camera, connect a camera to FLIR Tools/Tools+ and transfer the template to the camera.
   - To use the template during post-analysis in FLIR Tools/Tools+, double-click an image, and then click *Import from template* under *Text annotations* in the right pane.

18.3.3.3 Manually creating a table template

18.3.3.3.1 General

A text comment file (*.tcf) is an annotation format that is proprietary to FLIR Systems. It defines a table structure that can be used to add text table annotations to FLIR images. You can create text comment files (*.tcf files) and use these files as table templates in the camera.

The camera ships with an example text comment table file: example_text_comment.tcf. The file is stored on the memory card in the subfolder \TextTableTemplates. You can make a copy of the example file and modify it using a text editor such as Microsoft Notepad.

When creating or modifying a text comment file, keep the following rules in mind:

1. Lines starting with “#” are regarded as comments and will be ignored.
2. Lines that start with “<” and end with “>” are labels and will appear on the left-hand side of the table.
3. Non-empty lines under a label line are regarded as values and will be displayed as options to the label above.
4. When you save the file, select UTF-8 encoding. With UTF-8 encoding, the file will support all languages currently supported by the camera.
5. The template will be updated by the camera if you add or remove values in the text table annotations dialog in the camera. This enables you to modify its content while you are working with the camera.
6. The camera will find all text table template files if:
   - They are placed on the memory card in the subfolder \TextTableTemplates.
   - They have an ASCII filename and the file extension .tcf. (ASCII characters include a–z, A–Z, 0–9, and basic punctuation, and spaces can be used. The file can contain non-ASCII text, but the filename must be ASCII.)

18.3.3.3.2 Example mark-up structure

The file format for the text comment table template is *.tcf. This code sample is an example mark-up structure of such a file, and shows how the mark-up appears in a text editor such as Notepad.

```
<Site>
Company A
Company B
<Location>
Substation A
<Object>
Engine
Vent
Vault
Door
<ObjectID>
A1a1
A1b2
A1c3
```

```
<Deviation>
Overload
Moisture
Draft
<Remedy>
Replace
Fix
No action
<Severity>
Critical
Non-critical
<Severity>
```

18.4 Adding a voice annotation

18.4.1 General

A voice annotation is an audio recording that is saved to the infrared image file. The recording can be played back in the camera, and in image analysis and reporting software from FLIR Systems.

The voice annotation is recorded using the built-in microphone. You can also use a Bluetooth-enabled headset. For information on how to pair a headset with the camera, see section 22 *Pairing Bluetooth devices*, page 97.

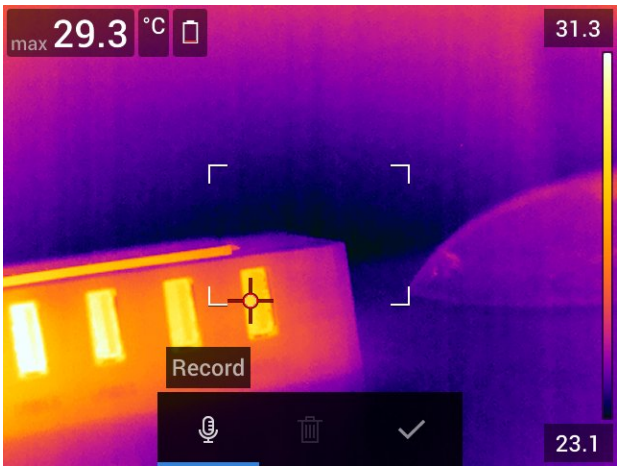

18.4.2 Procedure

Follow this procedure:

1. Open the image in the image archive.
2. Push the navigation pad to display the top toolbar.
3. On the top toolbar, select the icon and push the navigation pad.
4. On the right toolbar, select the icon and push the navigation pad.
5. A context menu is displayed.
6. To start a recording, select (*Record*) and push the navigation pad.
7. To stop the recording, select (*Stop*) and push the navigation pad.

8. To listen to the recording, select (*Play*) and push the navigation pad.
9. To delete the recording, select (*Delete*) and push the navigation pad.
10. When completed, select (*Done*) and push the navigation pad.

18.5 Adding a sketch

18.5.1 General

You can add a freehand drawing to an infrared image.

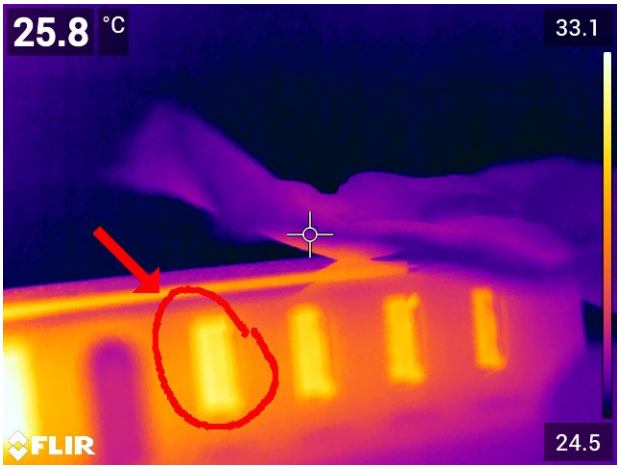

18.5.2 Procedure

Follow this procedure:

1. Open the image in the image archive.
2. Push the navigation pad to display the top toolbar.
3. On the top toolbar, select the icon and push the navigation pad.
4. On the right toolbar, select the icon and push the navigation pad.
5. You are now in sketch mode. Draw the sketch by touching the screen.

6. (Optional step.) Push the navigation pad. This displays a context menu. Do one or more of the following:

   - To change the color of the sketch tools, select (*Draw*) and push the navigation pad. Select the color and push the navigation pad.
   - To erase, select (*Eraser*) and push the navigation pad. Erase parts of the sketch by touching the screen.
   - To add an arrow, circle, or cross, select (*Stamp sketch*) and push the navigation pad. Select the type of stamp and push the navigation pad. The stamp is displayed in the center of the screen. You can move the stamp by using the navigation pad or by touching the screen. When completed, push the navigation pad.
   - To clear, select (*Clear all*) and push the navigation pad.
   - When the sketch is completed, select (*Save*) and push the navigation pad.

19 Programming the camera (time-lapse)

19.1 General

You can program the camera to save images periodically (time-lapse).

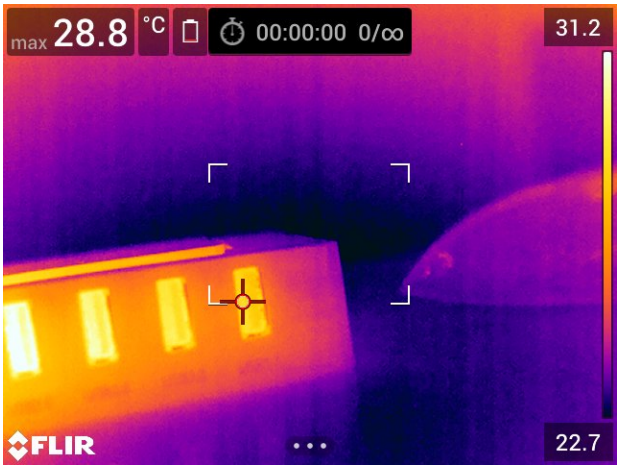

19.2 Procedure

Follow this procedure:

1. Push the navigation pad to display the menu system.
2. Select (*Recording mode*) and push the navigation pad. This displays a submenu.
3. Select (*Time-lapse*).
4. Push the navigation pad. This displays a dialog box where you can set the save conditions:
   - *Save interval*: Use the navigation pad to set the time interval between each saved image.
   - *Total number of images*: Periodic saving will stop when the set number of images have been saved.

     Note If you select "∞," the camera will keep on saving images until the memory card is full or until you manually stop the time-lapse.
5. Push the navigation pad. This closes the dialog box.
6. The time interval is displayed at the top of the screen.
7. To start the time-lapse (periodic saving), push the Save button.
8. To manually stop the time-lapse, push the Save button.
9. When the time-lapse is completed, an information screen is displayed. Push any button or touch the screen to return to the live image.

20 Recording video clips

20.1 General

You can record and save video clips to the memory card.

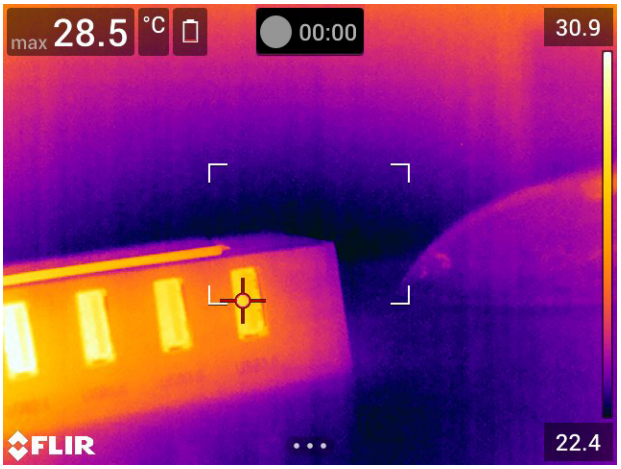

Note The camera can be configured to save video in *.mpg or *.csq format. Select (*Settings*) > *Save options & storage* > *Video compression*.

- *Mpeg (*.mpg)*: Mpeg recordings cannot be edited after the file has been saved.
- *Radiometric storage (*csq)*: A *.csq file supports full radiometry but is only supported by FLIR Systems software. The file does not include any visual image information. With this setting, only the image modes *Thermal* and *Macro* are supported when recording video. If any non-supported image mode is active when *Video* recording mode is selected, the camera will auto-switch to *Thermal* image mode.

20.2 Procedure

Follow this procedure:

1. Push the navigation pad to display the menu system.
2. Select (*Recording mode*) and push the navigation pad. This displays a submenu.
3. Select (*Video*) and push the navigation pad.
4. To start a recording, push the Save button. A counter at the top of the screen displays the duration of the recording.
5. To stop a recording, push the Save button. The recording is automatically saved to the image archive.

20.3 Playing a saved video clip

Follow this procedure:

1. Push the image archive button . This displays the *Gallery* with one or more folders.
2. Select a folder and push the navigation pad.
3. Select the video clip you want to play and push the navigation pad.
4. Push the navigation pad to display the top toolbar.

5. On the top toolbar, select the icon and push the navigation pad.
6. To play or pause the video clip, push the navigation pad.

21 Screening alarm

21.1 General

The screening alarm can be used, for example, at airports to detect passengers with elevated body temperatures, which may indicate the presence of a fever.

The screening alarm can also be used to detect temperature anomalies in a series of inspected objects in a similar/fixed setup.

Activating the screening mode will turn on a measurement box and screening data in the result table.

The sampled average temperature.

The alarm temperature.

The measured temperature.

The alarm will trigger when the measurement box measures a temperature higher than the alarm temperature. The alarm temperature is, in turn, the sum of a specified allowed deviation and a sampled average value.

WARNING
Make sure that the laser is disabled when you point the camera at the face of a person. The laser beam can cause eye irritation. Disable the laser by selecting (*Settings*) > *Device settings* > *Lamp & laser* > *Disable all*.

21.2 Procedure

Follow this procedure:

1. Enable the screening mode by selecting (*Settings*) > *Device settings* > *User interface options* > *Screening mode* = *On*.
2. Push the navigation pad to display the menu system.
3. Select (*Recording mode*) and push the navigation pad. This displays a submenu.
4. Select (*Screening*).
5. Push the navigation pad. This displays a dialog box where you can define the settings for the alarm:
   - *Allowed deviation*: The allowed deviation from the sampled average.
   - *Alarm sound*: Applicable values are *Beep* or *No sound*.
6. Push the navigation pad. This closes the dialog box.
7. Aim the camera toward a point of interest. The object should be within the frame of the measurement box.
8. To reset the sampled average, push and hold the programmable button P above the screen.
9. To sample, push the programmable button P above the screen.

10. Aim the camera toward more points of interest. Sample 10 times to build up a sample base by pushing the programmable button P above the screen.

    The alarm is now set up and ready to use. Occasionally record a few samples if the alarm is used for a long time or if the conditions change.

Note

- Every time you push the programmable button P above the screen, a sample is saved. Make sure you aim the camera toward an object within the interesting temperature range when you push (and hold) the button.
- The algorithm has a memory of the last 10 samples. It discriminates between the highest and lowest values, and calculates an average of the remaining values.
- Do not modify the measurement setup or activate another alarm because this will deactivate the screening alarm.

22 Pairing Bluetooth devices

22.1 General

You can use the camera with the following Bluetooth devices:

- METERLiNK devices (FLIR meters).
- Bluetooth-enabled headsets.

Before you can use a Bluetooth device with the camera, you need to pair the devices. The Bluetooth functionality is managed from the *Settings* menu. You can also enable/disable Bluetooth on the swipe-down menu. For more information, see section 9.5 *Swipe-down menu*, page 23.

22.2 Procedure

Follow this procedure:

1. Push the navigation pad to display the menu system.
2. Select (*Settings*) and push the navigation pad. This displays the *Settings* menu.
3. Use the navigation pad to select *Connections* > *Bluetooth*.
4. If the *Bluetooth* check box is unchecked, push the navigation pad to enable Bluetooth.

   Note You also need to ensure that the external Bluetooth device is in visible mode.

5. Select *Available devices* and push the navigation pad.
6. Wait until a list of available devices is displayed. This will take about 15 seconds.
7. When a Bluetooth device is found, select the device to add it, and begin the pairing procedure. The device is then ready to be used.

Note

- Only METERLiNK devices (FLIR meters) and Bluetooth-enabled headsets will appear in the list of available devices.
- You can add several devices.
- You can remove a device by selecting the device and then selecting *Unpair device*.
- After adding a METERLiNK device, such as the FLIR MR77 or FLIR DM93, the result from the meter will be visible in the result table and stored with the images. For more information, see section 24 *Fetching data from external FLIR meters*, page 99.
- After adding a Bluetooth-enabled headset, it is ready to be used for adding voice annotations. Adding a Bluetooth-enabled headset automatically disables the built-in microphone and speaker.

23 Configuring Wi-Fi

23.1 General

Depending on your camera configuration, you can connect the camera to a wireless local area network (WLAN) using Wi-Fi, or let the camera provide Wi-Fi access to other devices.

You can connect the camera in two different ways:

- *Most common use*: Setting up the camera as a wireless access point. This method is primarily used with other devices, e.g., an iPhone or iPad.
- *Less common use*: Connecting the camera to a wireless local area network (WLAN).

The Wi-Fi functionality is managed from the *Settings* menu. You can also enable/disable Wi-Fi on the swipe-down menu. For more information, see section 9.5 *Swipe-down menu*, page 23.

23.2 Setting up a wireless access point (most common use)

Follow this procedure:

1. Push the navigation pad to display the menu system.
2. Select (*Settings*) and push the navigation pad. This displays the *Settings* menu.
3. Use the navigation pad to select *Connections* > *Wi-Fi*.
4. Select *Share* and push the navigation pad.
5. (Optional step.) To display and change the parameters, select *Share settings* and push the navigation pad.
   - To change the SSID, select *Network name (SSID)* and push the navigation pad.
   - To change the WPA2 password, select *Password* and push the navigation pad.

   Note These parameters are set for your camera's network. They will be used by the external device to connect that device to the network.

23.3 Connecting the camera to a WLAN (less common use)

Follow this procedure:

1. Push the navigation pad to display the menu system.
2. Select (*Settings*) and push the navigation pad. This displays the *Settings* menu.
3. Use the navigation pad to select *Connections* > *Wi-Fi*.
4. Select *Connect to network* and push the navigation pad.
5. To display a list of the available networks, select *Available networks* and push the navigation pad.
6. Select one of the available networks and push the navigation pad.

   Note Password-protected networks are indicated with a padlock icon, and for these you will need to enter a password the first time you connect to the network. After that the camera will connect automatically to the network. To disable the automatic connection, select *Forget network*.

Note Some networks do not broadcast their existence. They appear in the list as *Untitled*. To connect to such a network, you will be prompted to enter additional parameters.

24 Fetching data from external FLIR meters

24.1 General

You can fetch data from some external FLIR meters that support Bluetooth and merge this data into the infrared image. When the camera is connected to a FLIR meter via Bluetooth, the measurement value from the meter is displayed in the result table of the camera. The FLIR meter value is also added to the information saved in the image file.

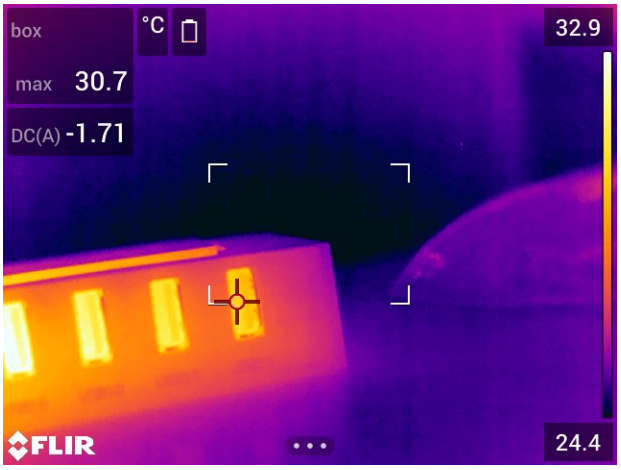

In preview mode and when editing an image in the archive, you can add more than one value from the same FLIR meter. The last added value is displayed below the previous values. The live value is displayed with a dotted outline.

If the screen display for values is full, it is still possible to add more values from the FLIR meter. Added values are then indicated by a box with a number that counts up each time a new value is added.

To find out whether a FLIR meter is supported by the camera, consult the meter documentation.

24.2 Technical support for external meters

Technical support	
Website	http://support.flir.com
E-mail	TMsupport@flir.com
Phone	855-499-3662
Repairs	repair@flir.com

24.3 Procedure

Note

- Before you can use a FLIR meter with the camera, you need to pair the devices. For more information, see section 22 *Pairing Bluetooth devices*, page 97.
- To add more than one FLIR meter value when saving an image, preview mode must be enabled. Select (*Settings*) > *Save options and storage* > *Preview image before saving* = *On*.

Follow this procedure:

1. Turn on the camera.
2. Turn on the FLIR meter.
3. On the FLIR meter, enable Bluetooth mode. Refer to the user documentation for the meter for information on how to do this.
4. On the FLIR meter, choose the quantity that you want to use (voltage, current, resistance, etc.). Refer to the user documentation for the meter for information on how to do this.

   Results from the meter will now automatically be displayed in the result table in the top left corner of the infrared camera screen.
5. On the camera, in preview mode and when editing an image in the archive, you can do the following:

   - Push the programmable button P to add the value currently displayed by the FLIR meter.
   - Push and hold the programmable button P to remove all FLIR meter values from the image.

   Note Any function assigned to the programmable button is temporarily disabled when in preview mode or when editing an image in the archive.

24.4 Typical moisture measurement and documentation procedure

24.4.1 General

The following procedure can form the basis for other procedures using FLIR meters and infrared cameras.

24.4.2 Procedure

Follow this procedure:

1. Use the infrared camera to identify any potential damp areas behind walls and ceilings.
2. Use the moisture meter to measure the moisture levels at various suspect locations that may have been found.
3. When an area of particular interest is located, store the moisture reading in the moisture meter's memory and identify the measurement area with a handprint or other thermal identifying marker.
4. Recall the reading from the meter memory. The moisture meter will now continuously transmit this reading to the infrared camera.
5. Use the camera to take a thermal image of the area with the identifying marker. The stored data from the moisture meter will also be saved on the image.

24.5 More information

For more information, see the user manuals that are shipped with FLIR meters.

25 Changing settings

25.1 General

You can change a variety of settings in the camera. You do this on the *Settings* menu.

The *Settings* menu includes the following:

- *Connections*.
- *Camera temperature range*.
- *Save options & storage*.
- *Device settings*.

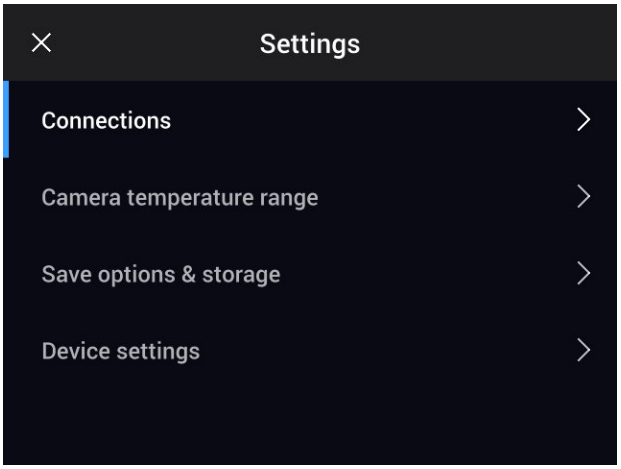

25.1.1 *Connections*

- *Wi-Fi*: This setting defines Wi-Fi networks. For more information, see section 23 *Configuring Wi-Fi*, page 98.
- *Bluetooth*: This setting defines Bluetooth connectivity. For more information, see section 22 *Pairing Bluetooth devices*, page 97.

25.1.2 *Camera temperature range*

For accurate temperature measurements, you must change the *Camera temperature range* setting to suit the expected temperature of the object you are inspecting.

Available temperature range options are dependent on the camera model. The unit (°C or °F) depends on the temperature unit setting, see section 25.1.4 *Device settings*, page 103.

25.1.3 *Save options & storage*

- *Preview image before saving*: This setting defines if a preview image will be displayed before the image is saved.
- *Add annotation after saving*: This setting defines if an annotation tool will be displayed when the image has been saved. Available options are:
  - *Save*: No annotation tool will be displayed.
  - *Save & add note*: The note annotation tool will be displayed.
  - *Save & add table*: The table annotation tool will be displayed.
  - *Save & add voice annotation*: The voice annotation tool will be displayed.
  - *Save & add sketch*: The sketch annotation tool will be displayed.
  - *Save & add any annotation*: The annotation tool menu will be displayed.

- *Image resolution*: This setting defines the resolution of the images captured by the camera. Available options are *Normal* and *UltraMax*[5]. For more information, see section 12.1.4 *About UltraMax*, page 47.
- *Video compression*: This setting defines the storage format for video clips. Available options are:
  - *Mpeg (*.mpeg)*: MPEG recordings cannot be edited after the file has been saved.
  - *Radiometric storage (*.csq)*: A CSQ file supports full radiometry but is only supported by FLIR Systems software. The file does not include any visual image information. With this setting, only the image modes *Thermal* and *Macro* are supported when recording video.
- *Photo as separate JPEG*: For the *Thermal MSX*, *Thermal*, and *Picture in picture* image modes, a visual image is always saved in the same JPEG file as the thermal image. Enabling this setting saves an extra low-resolution visual image as a separate JPEG file.
- *Digital camera*: This setting is used to turn on/off the digital camera. Turning off the digital camera can for example be required in restricted areas and in confidential (e.g. doctor/patient) situations. When the digital camera is off, the images modes *Thermal MSX* and *Picture in picture* are disabled.
- *Measure distance*: This setting defines if the laser distance meter will be used to measure the distance when an image is saved. With this setting, the *Object distance* parameter (see section 16.5 *Changing the measurement parameters*, page 73) in the image data is automatically updated with the measured distance when an image is saved. (There is no effect on the *Object distance* setting in live mode.)
- *File naming format*: This setting defines the naming format for new image/video files. The setting has no impact on already saved files in the archive. Available options are:
  - *DCF*: DCF (Design rule for Camera File system) is a standard that specifies the naming method of image files (and much more). With this setting, the name of a saved image/video file will be FLIRxxxx, where xxxx is an incremental counter. Example: FLIR0001. (When the counter has reached 9999, the file name will change to IR_yyyyy.jpg.)
  - *Date prefix*: A prefix will be added to the filename, including the date and the text “IR_” for images and “MOV_” for videos. Examples: IR_2015-04-22_0002 and MOV_2015-04-22_0003. The date format will follow the *Date & time format* setting, see section 25.1.4 *Device settings*, page 103.

    Note With the *Date prefix* setting, the files may not automatically be detected by third-party applications.
- *Delete all saved files...*: This displays a dialog box where you can choose to permanently delete all the saved files (images and videos) from the memory card or to cancel the delete action.

25.1.4 *Device settings*

- *Language, time & units*: This submenu includes settings for a number of regional parameters:
  - *Language*.
  - *Temperature unit*.
  - *Distance unit*.
  - *Time zone*.
  - *Date & time*.
  - *Date & time format*.
- *Focus*: This submenu includes the following settings:

5. Not supported when using macro.

- *Autofocus*: When autofocusing, the infrared camera can use one of the following focus methods:
  - *Contrast*: The focus is based on maximizing the image contrast.
  - *Laser*: The focus is based on a laser distance measurement. The laser is on when the camera is autofocusing.
- *Continuous autofocus*: This setting is used to enable/disable continuous autofocus.

- *Display settings*: This submenu includes the following settings:
  - *Screen rotation*: This setting defines if the orientation of the overlay graphics will change according to how you hold the camera.

    Note You can also enable/disable screen rotation on the swipe-down menu. For more information, see section 9.5 *Swipe-down menu*, page 23.
  - *Image overlay information*: This setting specifies what image information the camera will display as an overlay on the image. For more information, see section 9.6 *Image overlay information*, page 23. You can select the following information to display:
    - *Date & time*.
    - *Emissivity*.
    - *Reflected temperature*.
    - *Distance*.
    - *Relative humidity*.
    - *Atmospheric temperature*.

    Note This setting only specifies what information to overlay on the image. All image information is always saved to the image file and is available in the image archive.
  - *Active display*: This setting defines the behavior of the display and viewfinder.
    - *Auto*: The display will automatically turn off when you look into the viewfinder.
    - *Screen*: The display is always on and the viewfinder is always off.
    - *Viewfinder*: The viewfinder is always on and the display is always off.
  - *Screen brightness*: The screen brightness slider is used to control the brightness of the screen.

    Note You can also control the screen brightness on the swipe-down menu. For more information, see section 9.5 *Swipe-down menu*, page 23.
  - *Viewfinder brightness*: This setting defines the brightness of the viewfinder. Available options are *Low*, *Medium*, and *High*.
- *Geolocation*: This submenu includes the following settings:
  - *GPS*: This setting is used to enable/disable the GPS.
- *Lamp & laser*: This submenu includes the following settings:
  - *Enable lamp & laser*: This setting is used to enable the camera lamp and the laser.
  - *Enable lamp & laser + Use lamp as flash*: This setting is used to enable the flash function. When the flash function is enabled, the camera lamp will flash when an image is saved.
  - *Disable all*: This setting is used to disable the camera lamp, laser, and flash function.
- *Auto power off*: This setting defines how soon the camera is automatically turned off. Available choices are *Off*, *5 min*, and *20 min*.
- *User interface options*: This submenu includes the following settings:

- *Manual adjustment using touch*: This setting is used to enable/disable the touch functionality for manual image adjustments. For more information, see section 14.3 *Adjusting the infrared image*, page 59.
- *Manual adjustment mode*: This setting specifies the type of manual image adjustment mode. Available options are *Level, Max, Min* and *Level, Span*. For more information, see section 14.3 *Adjusting the infrared image*, page 59.
- *Emissivity mode*: This setting specifies how the measurement parameter emissivity will be entered. Available options are *Select values* and *Select from materials table*. For more information, see section 14.6 *Changing the measurement parameters*, page 64.
- *Screening mode*: This setting is used to enable/disable screening mode. For more information, see section 21 *Screening alarm*, page 95.

- *Volume*: The volume slider is used to control the volume of the built-in speaker.
- *Reset options*: This submenu includes the following settings:
  - *Reset default camera mode...*: This setting will affect the image mode, color palette, measurement tools, and measurement parameters. Saved images will not be affected.
  - *Reset device settings to factory default...*: This setting will affect all camera settings, including regional settings. Saved images will not be affected. The camera will be restarted and you will be prompted to set the regional settings.
  - *Reset image counter...*: This setting will reset the numbering of the image filenames. To prevent image files being overwritten, the new counter value will be based on the highest existing filename number in the image archive.

  Note When a reset option is selected, a dialog box is displayed with more information. You can choose to execute the reset action or to cancel.

- *Camera information*: This submenu displays information about the camera. No changes can be made.
  - *Model*.
  - *Serial number*.
  - *Part number*.
  - *Software*: The version of the software.
  - *Storage*: The used and free space on the memory card.
  - *Lens*: The field of view of the lens.
  - *Calibrate lens...*: This will start the lens–camera calibration wizard. For more information, see section 11.16 *Calibrating the lens–camera combination*, page 42.
  - *Battery*: The remaining battery capacity (in percent).
  - *Register camera...*: This will start the registration wizard. For more information, see section 6 *Register the camera*, page 10.
  - *Licenses*: Open-source license information.

- *Regulatory*: Displays regulatory information about the camera. No changes can be made.

26 Cleaning the camera

26.1 Camera housing, cables, and other items

26.1.1 Liquids

Use one of these liquids:

- Warm water
- A weak detergent solution

26.1.2 Equipment

A soft cloth

26.1.3 Procedure

Follow this procedure:

1. Soak the cloth in the liquid.
2. Twist the cloth to remove excess liquid.
3. Clean the part with the cloth.

⚠ CAUTION
Do not apply solvents or similar liquids to the camera, the cables, or other items. This can cause damage.

26.2 Infrared lens

26.2.1 Liquids

Use one of these liquids:

- A commercial lens cleaning liquid with more than 30% isopropyl alcohol.
- 96% ethyl alcohol (C_2H_5OH).

26.2.2 Equipment

Cotton wool

⚠ CAUTION
If you use a lens cleaning cloth it must be dry. Do not use a lens cleaning cloth with the liquids that are given in section 26.2.1 above. These liquids can cause material on the lens cleaning cloth to become loose. This material can have an unwanted effect on the surface of the lens.

26.2.3 Procedure

Follow this procedure:

1. Soak the cotton wool in the liquid.
2. Twist the cotton wool to remove excess liquid.
3. Clean the lens one time only and discard the cotton wool.

⚠ WARNING
Make sure that you read all applicable MSDS (Material Safety Data Sheets) and warning labels on containers before you use a liquid: the liquids can be dangerous.

CAUTION

- Be careful when you clean the infrared lens. The lens has a delicate anti-reflective coating.
- Do not clean the infrared lens too vigorously. This can damage the anti-reflective coating.

26.3 Infrared detector

26.3.1 General

Even small amounts of dust on the infrared detector can result in major blemishes in the image. To remove any dust from the detector, follow the procedure below.

Note

- This section only applies to cameras where removing the lens exposes the infrared detector.
- In some cases the dust cannot be removed by following this procedure: the infrared detector must be cleaned mechanically. This mechanical cleaning must be carried out by an authorized service partner.

CAUTION

In Step 2 below, do not use pressurized air from pneumatic air circuits in a workshop, etc., as this air usually contains oil mist to lubricate pneumatic tools.

26.3.2 Procedure

Follow this procedure:

1. Remove the lens from the camera.
2. Use pressurized air from a compressed air canister to blow off the dust.

27 Technical data

Table of contents

27.1 Online field-of-view calculator 108
27.2 Note about technical data 108
27.3 Note about authoritative versions 108
27.4 FLIR T830 14° 109
27.5 FLIR T830 24° 115
27.6 FLIR T830 24° + 14° 121
27.7 FLIR T830 24° + 14° & 42° 127
27.8 FLIR T830 24° + 42° 134
27.9 FLIR T830 42° 140
27.10 FLIR T830 42°+ 14° 146
27.11 FLIR T840 14° 152
27.12 FLIR T840 24° 158
27.13 FLIR T840 24° + 14° 164
27.14 FLIR T840 24° + 14° & 42° 170
27.15 FLIR T840 24° + 42° 177
27.16 FLIR T840 42° 183
27.17 FLIR T840 42° + 14° 189

27.1 Online field-of-view calculator

Please visit http://support.flir.com and click the photo of the camera series for field-of-view tables for all lens–camera combinations.

27.2 Note about technical data

FLIR Systems reserves the right to change specifications at any time without prior notice. Please check http://support.flir.com for latest changes.

27.3 Note about authoritative versions

The authoritative version of this publication is English. In the event of divergences due to translation errors, the English text has precedence.

Any late changes are first implemented in English.

27.4 FLIR T830 14°

P/N: 82501-0101
Rev.: 55403

Imaging and optical data	
Infrared resolution	320 × 240 pixels
UltraMax (super-resolution)[6]	In FLIR Tools
NETD	<50 mK @ +30°C (+86°F)
Field of view	14° × 10°
Minimum focus distance	1.0 m (3.28 ft.)
Minimum focus distance with MSX	1.0 m (3.28 ft.)
Focal length	29 mm (1.41 in.)
Spatial resolution (IFOV)	0.75 mrad/pixel
Available extra lenses	• 42° (AutoCal) • 24° (AutoCal) • 6° (service calibration required)
Lens identification	Automatic
f number	1.5
Image frequency	30 Hz
Focus	• Continuous LDM • One-shot LDM • One-shot contrast • Manual
Field of view match	Yes
Digital zoom	1–4× continuous

Detector data	
Focal plane array/spectral range	Uncooled microbolometer/7.5–14 µm
Detector pitch	17 µm

Image presentation	
Resolution (display)	640 × 480 pixels (VGA)
Surface brightness (cd/m^2)	400
Screen size	4 in.
Viewing angle	80°
Color depth (bits)	24
Aspect ratio	4:3
Auto-rotation	Yes
Touchscreen	Optically bonded PCAP
Display technology	IPS
Cover glass material	Dragontrail®
Programmable buttons	2

6. Not supported when using macro.

Image presentation	
Viewfinder	Yes
Image adjustment	• Automatic • Automatic maximum • Automatic minimum • Manual

Image presentation modes	
Infrared image	Yes
Visual image	Yes
MSX	Yes
Picture in picture	Resizable and movable
Gallery	Yes

Measurement		
Camera temperature range	Object temperature range	Accuracy — for ambient temperature +15 to +35°C (+59 to +95° F)
–20 to +120°C (–4 to +248°F)	–20 to +100°C (–4 to +212°F)	±2°C (±3.6°F)
	+100 to +120°C (+212 to +248° F)	±2%
0 to +650°C (+32 to +1202°F)	0 to +100°C (+32 to +212°F)	±2°C (±3.6°F)
	+100 to + 650°C (+212 to +1202°F)	±2%
Optional +300 to +1200°C (+572 to +2192°F)	+300 to +1200°C (+572 to +2192°F)	±2%

Measurement analysis	
Spotmeter	3 in live mode
Area	3 in live mode
Automatic hot/cold detection	Automatic maximum/minimum markers within area
Measurement presets	• No measurements • Center spot • Hot spot • Cold spot • User preset 1 • User preset 2
Difference temperature	Yes
Reference temperature	Yes
Emissivity correction	Yes, variable from 0.01 to 1.0 or selected from materials list
Measurement corrections	Yes
External optics/windows correction	Yes
Screening	0.5°C (0.9°F) accuracy at 37°C (98.6°F) with reference

Alarm	
Color alarm (isotherm)	• Above • Below • Interval • Condensation (moisture/humidity/dewpoint) • Insulation
Measurement function alarm	Audible/visual alarms (above/below) on any selected measurement function

Set-up	
Color palettes	• Iron • Gray • Rainbow • Arctic • Lava • Rainbow HC
Setup commands	Local adaptation of units, language, date, and time formats
Languages	21

Service functions	
Camera software update	Use PC software FLIR Tools

Storage of images	
Storage media	Removable memory: SD card
Time lapse (Periodic image storage)	10 seconds to 24 hours (infrared)
Remote control operation	• Using FLIR Tools (using USB cable) • FLIR Tools Mobile (over Wi-Fi)
Image file format	Standard JPEG, measurement data included. Infrared-only mode.

Image annotations	
Voice	60 seconds with built-in microphone and speaker (and via Bluetooth) on still images and video
Text	Text from predefined list or soft keyboard on touchscreen
Visual image annotation	Yes
Image sketch	Yes: on infrared only
Sketch	From touchscreen
METERLiNK	Wireless connection (Bluetooth) to: FLIR meters with METERLiNK
Laser distance meter information	Yes
Area measurement information	Yes
GPS	Location data automatically added to every still image and first frame in video from built-in GPS

Video recording in camera	
Radiometric infrared-video recording	RTRR (.csq)
Non-radiometric infrared-video recording	H.264 to memory card
Visual video recording	H.264 to memory card

Video streaming	
Radiometric infrared-video streaming (compressed)	Over UVC
Non-radiometric video streaming (compressed: IR, MSX, visual, Picture in Picture)	• H.264 (AVC) over RTSP (Wi-Fi) • MPEG4 over RTSP (Wi-Fi) • MJPEG over UVC and RTSP (Wi-Fi)
Visual video streaming	Yes

Digital camera	
Resolution	5 MP with LED light
Focus	Fixed
Field of view	53° × 41°
Video lamp	Built-in LED light

Laser pointer	
Laser alignment	Position is automatically displayed on the infrared image
Laser distance meter	Activated by dedicated button
Laser	Class 2, 0.05–40 m (0.16–131 ft.) ±1% of measured distance

Data communication interfaces	
Interfaces	USB 2.0, Bluetooth, Wi-Fi, DisplayPort
METERLiNK/Bluetooth	Communication with headset and external sensors
Wi-Fi	Peer to peer (ad hoc) or infrastructure (network)
Audio	Microphone and speaker for voice annotation of images
USB	USB Type-C: data transfer/video/power
USB standard	USB 2.0 High Speed
Video out	DisplayPort
Video connector type	DisplayPort over USB Type-C

Radio	
Operating frequency	Bluetooth + EDR/LE: 2402–2480 MHz WLAN 2.4 GHz: 2412–2462 MHz WLAN 5 GHz: 5150–5350 MHz (DFS: only slave mode) Note that frequency band 5150–5350 MHz is for indoor use only, see national regulations.
RF output (EIRP)	Bluetooth + EDR/LE: < 10 dBm WLAN: < 17 dBm
Antenna	Integrated PIFA antenna (gain: maximum 1.4 dBi)

Power system	
Battery type	Rechargeable Li-ion battery
Battery voltage	3.6 V
Battery operating time	> 4 hours at 25°C (68°F) with typical use

Power system	
Charging system	In camera (AC adapter or 12 V from a vehicle) or two-bay charger
Charging time (using two-bay charger)	3.5 h to 90% capacity, on-screen indicator
Charging temperature	0°C to +45°C (+32°F to +113°F), except for the Korean market: +10°C to +45°C (+50°F to +113°F)
External power operation	AC adapter 90–260 V AC (50/60 Hz) or 12 V from a vehicle (cable with standard plug, optional)
Power management	Automatic shut-down and sleep mode

Environmental data	
Operating temperature range	–15 to +50°C (5–122°F)
Storage temperature range	–40 to +70°C (–40 to 158°F)
Humidity (operating and storage)	IEC 60068-2-30/24 hours, 95% relative humidity, 25–40°C (77–104°F)/2 cycles
EMC	• ETSI EN 301 489-1 (radio) • ETSI EN 301 489-17 • EN 61000-6-2 (immunity) • EN 61000-6-3 (emission) • FCC 47 CFR Part 15 Class B (emission)
Radio spectrum	• ETSI EN 300 228 • FCC Part 15.249 • RSS-247 Issue 2
Encapsulation	IP 54 (IEC 60529)
Shock	25g (IEC 60068-2-27)
Vibration	2g (IEC 60068-2-6)
Safety	EN/UL/CSA/PSE 60950-1

Physical data	
Weight (including battery)	1.4 kg (3.1 lb.)
Size (L × W × H)	• Lens vertical: 150.5 × 201.3 × 84.1 mm (5.9 × 7.9 × 3.3 in.) • Lens horisontal: 150.5 × 201.3 × 167.3 mm (5.9 × 7.9 × 6.6 in.)
Battery weight	195 g (6.89 oz.)
Battery size (L × W × H)	59 × 66 × 94 mm (2.3 × 2.6 × 3.7 in.)
Tripod mounting	UNC ¼″-20
Housing material	PCABS with TPE, magnesium
Color	Black

Warranty and service	
Warranty	http://www.flir.com/warranty/

Shipping information	
Packaging, type	Cardboard box
Packaging, contents	• Accessory box I: ◦ Power supply for battery charger ◦ Power supply, 15 W/3 A ◦ Printed documentation ◦ SD card (8 GB) ◦ USB 2.0 A to USB Type-C cable ◦ USB Type-C to HDMI and PD adapter ◦ USB Type-C to USB Type-C cable (USB 2.0 standard) • Accessory box II: ◦ Lens cap strap ◦ Lens cleaning cloth ◦ Neck strap ◦ Small eyecup • Battery (2 ea) • Battery charger • Hard transport case • Infrared camera with lens • Lens cap, front • Lens cap, front and rear (only for extra lenses)
Packaging, size	500 × 190 × 370 mm (19.7 × 7.5 × 14.6 in.)
EAN-13	4743254004085
UPC-12	845188018917
Country of origin	Estonia

Supplies & accessories:

- T130337ACC; Calibration target
- T199588; Lens 14° + case
- T199589; Lens 24° + case
- T199590; Lens 42° + case
- T300095; Lens 6° with case
- T911630ACC; Power supply for camera, 15 W/3 A
- T911631ACC; USB 2.0 A to USB Type-C cable, 0.9 m
- T911633ACC; Power supply for battery charger
- T911705ACC; USB Type-C to USB Type-C cable (USB 2.0 standard), 1.0 m
- T911706ACC; Car adapter 12 V
- T911845ACC; USB Type-C to HDMI and PD adapter
- T911846ACC; USB 2.0 A to USB Type-C with Power supply
- T199300ACC; Battery
- T199610; Battery charger
- T199347ACC; Hard transport case
- T199616; Option, High temperature, +300 to +1200°C
- T199609; Option, Macro mode 71/103 µm for 24°
- T300030; Option, No radio
- T198495; Pouch
- T197771ACC; Bluetooth Headset
- T198583; FLIR Tools+ (download card incl. license key)
- T198696; FLIR ResearchIR Max 4 (hardware sec. dev.)
- T199013; FLIR ResearchIR Max 4 (printed license key)
- T199043; FLIR ResearchIR Max 4 Upgrade (printed license key)

27.5 FLIR T830 24°

P/N: 82502-0101
Rev.: 55402

Imaging and optical data	
Infrared resolution	320 × 240 pixels
UltraMax (super-resolution)[7]	In FLIR Tools
NETD	<40 mK @ +30°C (+86°F)
Field of view	24° × 18°
Minimum focus distance	• 0.15 m (0.49 ft.) • Macro mode 103 µm as option
Minimum focus distance with MSX	0.5 m (1.64 ft.)
Focal length	17 mm (0.67 in.)
Spatial resolution (IFOV)	1.31 mrad/pixel
Available extra lenses	• 42° (AutoCal) • 14° (AutoCal) • 6° (service calibration required)
Lens identification	Automatic
f number	1.3
Image frequency	30 Hz
Focus	• Continuous LDM • One-shot LDM • One-shot contrast • Manual
Field of view match	Yes
Digital zoom	1–4× continuous

Detector data	
Focal plane array/spectral range	Uncooled microbolometer/7.5–14 µm
Detector pitch	17 µm

Image presentation	
Resolution (display)	640 × 480 pixels (VGA)
Surface brightness (cd/m^2)	400
Screen size	4 in.
Viewing angle	80°
Color depth (bits)	24
Aspect ratio	4:3
Auto-rotation	Yes
Touchscreen	Optically bonded PCAP
Display technology	IPS
Cover glass material	Dragontrail®

7. Not supported when using macro.

Image presentation	
Programmable buttons	2
Viewfinder	Yes
Image adjustment	• Automatic • Automatic maximum • Automatic minimum • Manual

Image presentation modes	
Infrared image	Yes
Visual image	Yes
MSX	Yes
Picture in picture	Resizable and movable
Gallery	Yes

Measurement		
Camera temperature range	Object temperature range	Accuracy — for ambient temperature +15 to +35°C (+59 to +95° F)
–20 to +120°C (–4 to +248°F)	–20 to +100°C (–4 to +212°F)	±2°C (±3.6°F)
	+100 to +120°C (+212 to +248° F)	±2%
0 to +650°C (+32 to +1202°F)	0 to +100°C (+32 to +212°F)	±2°C (±3.6°F)
	+100 to + 650°C (+212 to +1202°F)	±2%
Optional +300 to +1200°C (+572 to +2192°F)	+300 to +1200°C (+572 to +2192°F)	±2%

Measurement analysis	
Spotmeter	3 in live mode
Area	3 in live mode
Automatic hot/cold detection	Automatic maximum/minimum markers within area
Measurement presets	• No measurements • Center spot • Hot spot • Cold spot • User preset 1 • User preset 2
Difference temperature	Yes
Reference temperature	Yes
Emissivity correction	Yes, variable from 0.01 to 1.0 or selected from materials list
Measurement corrections	Yes
External optics/windows correction	Yes
Screening	0.5°C (0.9°F) accuracy at 37°C (98.6°F) with reference

Alarm	
Color alarm (isotherm)	• Above • Below • Interval • Condensation (moisture/humidity/dewpoint) • Insulation
Measurement function alarm	Audible/visual alarms (above/below) on any selected measurement function

Set-up	
Color palettes	• Iron • Gray • Rainbow • Arctic • Lava • Rainbow HC
Setup commands	Local adaptation of units, language, date, and time formats
Languages	21

Service functions	
Camera software update	Use PC software FLIR Tools

Storage of images	
Storage media	Removable memory: SD card
Time lapse (Periodic image storage)	10 seconds to 24 hours (infrared)
Remote control operation	• Using FLIR Tools (using USB cable) • FLIR Tools Mobile (over Wi-Fi)
Image file format	Standard JPEG, measurement data included. Infrared-only mode.

Image annotations	
Voice	60 seconds with built-in microphone and speaker (and via Bluetooth) on still images and video
Text	Text from predefined list or soft keyboard on touchscreen
Visual image annotation	Yes
Image sketch	Yes: on infrared only
Sketch	From touchscreen
METERLiNK	Wireless connection (Bluetooth) to: FLIR meters with METERLiNK
Laser distance meter information	Yes
Area measurement information	Yes
GPS	Location data automatically added to every still image and first frame in video from built-in GPS

Video recording in camera	
Radiometric infrared-video recording	RTRR (.csq)
Non-radiometric infrared-video recording	H.264 to memory card
Visual video recording	H.264 to memory card

Video streaming	
Radiometric infrared-video streaming (compressed)	Over UVC
Non-radiometric video streaming (compressed: IR, MSX, visual, Picture in Picture)	• H.264 (AVC) over RTSP (Wi-Fi) • MPEG4 over RTSP (Wi-Fi) • MJPEG over UVC and RTSP (Wi-Fi)
Visual video streaming	Yes

Digital camera	
Resolution	5 MP with LED light
Focus	Fixed
Field of view	53° × 41°
Video lamp	Built-in LED light

Laser pointer	
Laser alignment	Position is automatically displayed on the infrared image
Laser distance meter	Activated by dedicated button
Laser	Class 2, 0.05–40 m (0.16–131 ft.) ±1% of measured distance

Data communication interfaces	
Interfaces	USB 2.0, Bluetooth, Wi-Fi, DisplayPort
METERLiNK/Bluetooth	Communication with headset and external sensors
Wi-Fi	Peer to peer (ad hoc) or infrastructure (network)
Audio	Microphone and speaker for voice annotation of images
USB	USB Type-C: data transfer/video/power
USB standard	USB 2.0 High Speed
Video out	DisplayPort
Video connector type	DisplayPort over USB Type-C

Radio	
Operating frequency	Bluetooth + EDR/LE: 2402–2480 MHz WLAN 2.4 GHz: 2412–2462 MHz WLAN 5 GHz: 5150–5350 MHz (DFS: only slave mode) Note that frequency band 5150–5350 MHz is for indoor use only, see national regulations.
RF output (EIRP)	Bluetooth + EDR/LE: < 10 dBm WLAN: < 17 dBm
Antenna	Integrated PIFA antenna (gain: maximum 1.4 dBi)

Power system	
Battery type	Rechargeable Li-ion battery
Battery voltage	3.6 V
Battery operating time	> 4 hours at 25°C (68°F) with typical use

Power system	
Charging system	In camera (AC adapter or 12 V from a vehicle) or two-bay charger
Charging time (using two-bay charger)	3.5 h to 90% capacity, on-screen indicator
Charging temperature	0°C to +45°C (+32°F to +113°F), except for the Korean market: +10°C to +45°C (+50°F to +113°F)
External power operation	AC adapter 90–260 V AC (50/60 Hz) or 12 V from a vehicle (cable with standard plug, optional)
Power management	Automatic shut-down and sleep mode

Environmental data	
Operating temperature range	–15 to +50°C (5–122°F)
Storage temperature range	–40 to +70°C (–40 to 158°F)
Humidity (operating and storage)	IEC 60068-2-30/24 hours, 95% relative humidity, 25–40°C (77–104°F)/2 cycles
EMC	• ETSI EN 301 489-1 (radio) • ETSI EN 301 489-17 • EN 61000-6-2 (immunity) • EN 61000-6-3 (emission) • FCC 47 CFR Part 15 Class B (emission)
Radio spectrum	• ETSI EN 300 228 • FCC Part 15.249 • RSS-247 Issue 2
Encapsulation	IP 54 (IEC 60529)
Shock	25g (IEC 60068-2-27)
Vibration	2g (IEC 60068-2-6)
Safety	EN/UL/CSA/PSE 60950-1

Physical data	
Weight (including battery)	1.4 kg (3.1 lb.)
Size (L × W × H)	• Lens vertical: 150.5 × 201.3 × 84.1 mm (5.9 × 7.9 × 3.3 in.) • Lens horisontal: 150.5 × 201.3 × 167.3 mm (5.9 × 7.9 × 6.6 in.)
Battery weight	195 g (6.89 oz.)
Battery size (L × W × H)	59 × 66 × 94 mm (2.3 × 2.6 × 3.7 in.)
Tripod mounting	UNC ¼″-20
Housing material	PCABS with TPE, magnesium
Color	Black

Warranty and service	
Warranty	http://www.flir.com/warranty/

Shipping information	
Packaging, type	Cardboard box
Packaging, contents	• Accessory box I: ◦ Power supply for battery charger ◦ Power supply, 15 W/3 A ◦ Printed documentation ◦ SD card (8 GB) ◦ USB 2.0 A to USB Type-C cable ◦ USB Type-C to HDMI and PD adapter ◦ USB Type-C to USB Type-C cable (USB 2.0 standard) • Accessory box II: ◦ Lens cap strap ◦ Lens cleaning cloth ◦ Neck strap ◦ Small eyecup • Battery (2 ea) • Battery charger • Hard transport case • Infrared camera with lens • Lens cap, front • Lens cap, front and rear (only for extra lenses)
Packaging, size	500 × 190 × 370 mm (19.7 × 7.5 × 14.6 in.)
EAN-13	4743254004092
UPC-12	845188018924
Country of origin	Estonia

Supplies & accessories:

Supplies & accessories:

- T130337ACC; Calibration target
- T199588; Lens 14° + case
- T199589; Lens 24° + case
- T199590; Lens 42° + case
- T300095; Lens 6° with case
- T911630ACC; Power supply for camera, 15 W/3 A
- T911631ACC; USB 2.0 A to USB Type-C cable, 0.9 m
- T911633ACC; Power supply for battery charger
- T911705ACC; USB Type-C to USB Type-C cable (USB 2.0 standard), 1.0 m
- T911706ACC; Car adapter 12 V
- T911845ACC; USB Type-C to HDMI and PD adapter
- T911846ACC; USB 2.0 A to USB Type-C with Power supply
- T199300ACC; Battery
- T199610; Battery charger
- T199347ACC; Hard transport case
- T199616; Option, High temperature, +300 to +1200°C
- T199609; Option, Macro mode 71/103 µm for 24°
- T300030; Option, No radio
- T198495; Pouch
- T197771ACC; Bluetooth Headset
- T198583; FLIR Tools+ (download card incl. license key)
- T198696; FLIR ResearchIR Max 4 (hardware sec. dev.)
- T199013; FLIR ResearchIR Max 4 (printed license key)
- T199043; FLIR ResearchIR Max 4 Upgrade (printed license key)

27.6 FLIR T830 24° + 14°

P/N: 82504-0101
Rev.: 55400

Imaging and optical data	
Infrared resolution	320 × 240 pixels
UltraMax (super-resolution)[8]	In FLIR Tools
NETD	• <40 mK, 24° @ +30°C (+86°F) • <50 mK, 14° @ +30°C (+86°F)
Field of view	• 24° × 18° • 14° × 10°
Minimum focus distance	• 0.15 m (0.49 ft.), 24° • 1.0 m (3.28 ft.), 14° • Macro mode 103 µm as option to 24°
Minimum focus distance with MSX	• 0.5 m (1.64 ft.), 24° • 1.0 m (3.28 ft.), 14°
Focal length	• 17 mm (0.67 in.), 24° • 29 mm (1.41 in.), 14°
Spatial resolution (IFOV)	• 1.31 mrad/pixel, 24° • 0.75 mrad/pixel, 14°
Available extra lenses	• 42° (AutoCal) • 6° (service calibration required)
Lens identification	Automatic
f number	• 1.3, 24° • 1.5, 14°
Image frequency	30 Hz
Focus	• Continuous LDM • One-shot LDM • One-shot contrast • Manual
Field of view match	Yes
Digital zoom	1–4× continuous

Detector data	
Focal plane array/spectral range	Uncooled microbolometer/7.5–14 µm
Detector pitch	17 µm

Image presentation	
Resolution (display)	640 × 480 pixels (VGA)
Surface brightness (cd/m^2)	400
Screen size	4 in.
Viewing angle	80°

8. Not supported when using macro.

Image presentation	
Color depth (bits)	24
Aspect ratio	4:3
Auto-rotation	Yes
Touchscreen	Optically bonded PCAP
Display technology	IPS
Cover glass material	Dragontrail®
Programmable buttons	2
Viewfinder	Yes
Image adjustment	• Automatic • Automatic maximum • Automatic minimum • Manual

Image presentation modes	
Infrared image	Yes
Visual image	Yes
MSX	Yes
Picture in picture	Resizable and movable
Gallery	Yes

Measurement		
Camera temperature range	Object temperature range	Accuracy — for ambient temperature +15 to +35°C (+59 to +95° F)
–20 to +120°C (–4 to +248°F)	–20 to +100°C (–4 to +212°F)	±2°C (±3.6°F)
	+100 to +120°C (+212 to +248° F)	±2%
0 to +650°C (+32 to +1202°F)	0 to +100°C (+32 to +212°F)	±2°C (±3.6°F)
	+100 to + 650°C (+212 to +1202°F)	±2%
Optional +300 to +1200°C (+572 to +2192°F)	+300 to +1200°C (+572 to +2192°F)	±2%

Measurement analysis	
Spotmeter	3 in live mode
Area	3 in live mode
Automatic hot/cold detection	Automatic maximum/minimum markers within area
Measurement presets	• No measurements • Center spot • Hot spot • Cold spot • User preset 1 • User preset 2
Difference temperature	Yes
Reference temperature	Yes
Emissivity correction	Yes, variable from 0.01 to 1.0 or selected from materials list

Measurement analysis	
Measurement corrections	Yes
External optics/windows correction	Yes
Screening	0.5°C (0.9°F) accuracy at 37°C (98.6°F) with reference

Alarm	
Color alarm (isotherm)	• Above • Below • Interval • Condensation (moisture/humidity/dewpoint) • Insulation
Measurement function alarm	Audible/visual alarms (above/below) on any selected measurement function

Set-up	
Color palettes	• Iron • Gray • Rainbow • Arctic • Lava • Rainbow HC
Setup commands	Local adaptation of units, language, date, and time formats
Languages	21

Service functions	
Camera software update	Use PC software FLIR Tools

Storage of images	
Storage media	Removable memory: SD card
Time lapse (Periodic image storage)	10 seconds to 24 hours (infrared)
Remote control operation	• Using FLIR Tools (using USB cable) • FLIR Tools Mobile (over Wi-Fi)
Image file format	Standard JPEG, measurement data included. Infrared-only mode.

Image annotations	
Voice	60 seconds with built-in microphone and speaker (and via Bluetooth) on still images and video
Text	Text from predefined list or soft keyboard on touchscreen
Visual image annotation	Yes
Image sketch	Yes: on infrared only
Sketch	From touchscreen
METERLiNK	Wireless connection (Bluetooth) to: FLIR meters with METERLiNK
Laser distance meter information	Yes
Area measurement information	Yes
GPS	Location data automatically added to every still image and first frame in video from built-in GPS

Video recording in camera	
Radiometric infrared-video recording	RTRR (.csq)
Non-radiometric infrared-video recording	H.264 to memory card
Visual video recording	H.264 to memory card

Video streaming	
Radiometric infrared-video streaming (compressed)	Over UVC
Non-radiometric video streaming (compressed: IR, MSX, visual, Picture in Picture)	• H.264 (AVC) over RTSP (Wi-Fi) • MPEG4 over RTSP (Wi-Fi) • MJPEG over UVC and RTSP (Wi-Fi)
Visual video streaming	Yes

Digital camera	
Resolution	5 MP with LED light
Focus	Fixed
Field of view	53° × 41°
Video lamp	Built-in LED light

Laser pointer	
Laser alignment	Position is automatically displayed on the infrared image
Laser distance meter	Activated by dedicated button
Laser	Class 2, 0.05–40 m (0.16–131 ft.) ±1% of measured distance

Data communication interfaces	
Interfaces	USB 2.0, Bluetooth, Wi-Fi, DisplayPort
METERLiNK/Bluetooth	Communication with headset and external sensors
Wi-Fi	Peer to peer (ad hoc) or infrastructure (network)
Audio	Microphone and speaker for voice annotation of images
USB	USB Type-C: data transfer/video/power
USB standard	USB 2.0 High Speed
Video out	DisplayPort
Video connector type	DisplayPort over USB Type-C

Radio	
Operating frequency	Bluetooth + EDR/LE: 2402–2480 MHz WLAN 2.4 GHz: 2412–2462 MHz WLAN 5 GHz: 5150–5350 MHz (DFS: only slave mode) Note that frequency band 5150–5350 MHz is for indoor use only, see national regulations.
RF output (EIRP)	Bluetooth + EDR/LE: < 10 dBm WLAN: < 17 dBm
Antenna	Integrated PIFA antenna (gain: maximum 1.4 dBi)

Power system	
Battery type	Rechargeable Li-ion battery
Battery voltage	3.6 V
Battery operating time	> 4 hours at 25°C (68°F) with typical use
Charging system	In camera (AC adapter or 12 V from a vehicle) or two-bay charger
Charging time (using two-bay charger)	3.5 h to 90% capacity, on-screen indicator
Charging temperature	0°C to +45°C (+32°F to +113°F), except for the Korean market: +10°C to +45°C (+50°F to +113°F)
External power operation	AC adapter 90–260 V AC (50/60 Hz) or 12 V from a vehicle (cable with standard plug, optional)
Power management	Automatic shut-down and sleep mode

Environmental data	
Operating temperature range	–15 to +50°C (5–122°F)
Storage temperature range	–40 to +70°C (–40 to 158°F)
Humidity (operating and storage)	IEC 60068-2-30/24 hours, 95% relative humidity, 25–40°C (77–104°F)/2 cycles
EMC	• ETSI EN 301 489-1 (radio) • ETSI EN 301 489-17 • EN 61000-6-2 (immunity) • EN 61000-6-3 (emission) • FCC 47 CFR Part 15 Class B (emission)
Radio spectrum	• ETSI EN 300 228 • FCC Part 15.249 • RSS-247 Issue 2
Encapsulation	IP 54 (IEC 60529)
Shock	25g (IEC 60068-2-27)
Vibration	2g (IEC 60068-2-6)
Safety	EN/UL/CSA/PSE 60950-1

Physical data	
Weight (including battery)	1.4 kg (3.1 lb.)
Size (L × W × H)	• Lens vertical: 150.5 × 201.3 × 84.1 mm (5.9 × 7.9 × 3.3 in.) • Lens horisontal: 150.5 × 201.3 × 167.3 mm (5.9 × 7.9 × 6.6 in.)
Battery weight	195 g (6.89 oz.)
Battery size (L × W × H)	59 × 66 × 94 mm (2.3 × 2.6 × 3.7 in.)
Tripod mounting	UNC ¼″-20
Housing material	PCABS with TPE, magnesium
Color	Black

Warranty and service	
Warranty	http://www.flir.com/warranty/

Shipping information	
Packaging, type	Cardboard box
Packaging, contents	• Accessory box I: ◦ Power supply for battery charger ◦ Power supply, 15 W/3 A ◦ Printed documentation ◦ SD card (8 GB) ◦ USB 2.0 A to USB Type-C cable ◦ USB Type-C to HDMI and PD adapter ◦ USB Type-C to USB Type-C cable (USB 2.0 standard) • Accessory box II: ◦ Lens cap strap ◦ Lens cleaning cloth ◦ Neck strap ◦ Small eyecup • Battery (2 ea) • Battery charger • Extra lens, 14° • Hard transport case • Infrared camera with lens • Lens cap, front • Lens cap, front and rear (only for extra lenses)
Packaging, size	500 × 190 × 370 mm (19.7 × 7.5 × 14.6 in.)
EAN-13	4743254004108
UPC-12	845188018931
Country of origin	Estonia

Supplies & accessories:

- T130337ACC; Calibration target
- T199588; Lens 14° + case
- T199589; Lens 24° + case
- T199590; Lens 42° + case
- T300095; Lens 6° with case
- T911630ACC; Power supply for camera, 15 W/3 A
- T911631ACC; USB 2.0 A to USB Type-C cable, 0.9 m
- T911633ACC; Power supply for battery charger
- T911705ACC; USB Type-C to USB Type-C cable (USB 2.0 standard), 1.0 m
- T911706ACC; Car adapter 12 V
- T911845ACC; USB Type-C to HDMI and PD adapter
- T911846ACC; USB 2.0 A to USB Type-C with Power supply
- T199300ACC; Battery
- T199610; Battery charger
- T199347ACC; Hard transport case
- T199616; Option, High temperature, +300 to +1200°C
- T199609; Option, Macro mode 71/103 µm for 24°
- T300030; Option, No radio
- T198495; Pouch
- T197771ACC; Bluetooth Headset
- T198583; FLIR Tools+ (download card incl. license key)
- T198696; FLIR ResearchIR Max 4 (hardware sec. dev.)
- T199013; FLIR ResearchIR Max 4 (printed license key)
- T199043; FLIR ResearchIR Max 4 Upgrade (printed license key)

27.7 FLIR T830 24° + 14° & 42°

P/N: 82506-0101
Rev.: 55398

Imaging and optical data	
Infrared resolution	320 × 240 pixels
UltraMax (super-resolution)[9]	In FLIR Tools
NETD	• <30 mK, 42° @ +30°C (+86°F) • <40 mK, 24° @ +30°C (+86°F) • <50 mK, 14° @ +30°C (+86°F)
Field of view	• 42° × 32° • 24° × 18° • 14° × 10°
Minimum focus distance	• 0.15 m (0.49 ft.), 42° • 0.15 m (0.49 ft.), 24° • 1.0 m (3.28 ft.), 14° • Macro mode 103 µm as option to 24°
Minimum focus distance with MSX	• 0.65 m (2.13 ft.), 42° • 0.5 m (1.64 ft.), 24° • 1.0 m (3.28 ft.), 14°
Focal length	• 10 mm (0.39 in.), 42° • 17 mm (0.67 in.), 24° • 29 mm (1.41 in.), 14°
Spatial resolution (IFOV)	• 2.41 mrad/pixel, 42° • 1.31 mrad/pixel, 24° • 0.75 mrad/pixel, 14°
Available extra lenses	• 6° (service calibration required)
Lens identification	Automatic
f number	• 1.1, 42° • 1.3, 24° • 1.5, 14°
Image frequency	30 Hz
Focus	• Continuous LDM • One-shot LDM • One-shot contrast • Manual
Field of view match	Yes
Digital zoom	1–4× continuous

Detector data	
Focal plane array/spectral range	Uncooled microbolometer/7.5–14 µm
Detector pitch	17 µm

9. Not supported when using macro.

Image presentation	
Resolution (display)	640 × 480 pixels (VGA)
Surface brightness (cd/m²)	400
Screen size	4 in.
Viewing angle	80°
Color depth (bits)	24
Aspect ratio	4:3
Auto-rotation	Yes
Touchscreen	Optically bonded PCAP
Display technology	IPS
Cover glass material	Dragontrail®
Programmable buttons	2
Viewfinder	Yes
Image adjustment	• Automatic • Automatic maximum • Automatic minimum • Manual

Image presentation modes	
Infrared image	Yes
Visual image	Yes
MSX	Yes
Picture in picture	Resizable and movable
Gallery	Yes

Measurement		
Camera temperature range	Object temperature range	Accuracy — for ambient temperature +15 to +35°C (+59 to +95° F)
–20 to +120°C (–4 to +248°F)	–20 to +100°C (–4 to +212°F)	±2°C (±3.6°F)
	+100 to +120°C (+212 to +248° F)	±2%
0 to +650°C (+32 to +1202°F)	0 to +100°C (+32 to +212°F)	±2°C (±3.6°F)
	+100 to + 650°C (+212 to +1202°F)	±2%
Optional +300 to +1200°C (+572 to +2192°F)	+300 to +1200°C (+572 to +2192°F)	±2%

Measurement analysis	
Spotmeter	3 in live mode
Area	3 in live mode
Automatic hot/cold detection	Automatic maximum/minimum markers within area
Measurement presets	• No measurements • Center spot • Hot spot • Cold spot • User preset 1 • User preset 2

Measurement analysis	
Difference temperature	Yes
Reference temperature	Yes
Emissivity correction	Yes, variable from 0.01 to 1.0 or selected from materials list
Measurement corrections	Yes
External optics/windows correction	Yes
Screening	0.5°C (0.9°F) accuracy at 37°C (98.6°F) with reference

Alarm	
Color alarm (isotherm)	• Above • Below • Interval • Condensation (moisture/humidity/dewpoint) • Insulation
Measurement function alarm	Audible/visual alarms (above/below) on any selected measurement function

Set-up	
Color palettes	• Iron • Gray • Rainbow • Arctic • Lava • Rainbow HC
Setup commands	Local adaptation of units, language, date, and time formats
Languages	21

Service functions	
Camera software update	Use PC software FLIR Tools

Storage of images	
Storage media	Removable memory: SD card
Time lapse (Periodic image storage)	10 seconds to 24 hours (infrared)
Remote control operation	• Using FLIR Tools (using USB cable) • FLIR Tools Mobile (over Wi-Fi)
Image file format	Standard JPEG, measurement data included. Infrared-only mode.

Image annotations	
Voice	60 seconds with built-in microphone and speaker (and via Bluetooth) on still images and video
Text	Text from predefined list or soft keyboard on touchscreen
Visual image annotation	Yes
Image sketch	Yes: on infrared only
Sketch	From touchscreen
METERLiNK	Wireless connection (Bluetooth) to: FLIR meters with METERLiNK

Image annotations	
Laser distance meter information	Yes
Area measurement information	Yes
GPS	Location data automatically added to every still image and first frame in video from built-in GPS

Video recording in camera	
Radiometric infrared-video recording	RTRR (.csq)
Non-radiometric infrared-video recording	H.264 to memory card
Visual video recording	H.264 to memory card

Video streaming	
Radiometric infrared-video streaming (compressed)	Over UVC
Non-radiometric video streaming (compressed: IR, MSX, visual, Picture in Picture)	• H.264 (AVC) over RTSP (Wi-Fi) • MPEG4 over RTSP (Wi-Fi) • MJPEG over UVC and RTSP (Wi-Fi)
Visual video streaming	Yes

Digital camera	
Resolution	5 MP with LED light
Focus	Fixed
Field of view	53° × 41°
Video lamp	Built-in LED light

Laser pointer	
Laser alignment	Position is automatically displayed on the infrared image
Laser distance meter	Activated by dedicated button
Laser	Class 2, 0.05–40 m (0.16–131 ft.) ±1% of measured distance

Data communication interfaces	
Interfaces	USB 2.0, Bluetooth, Wi-Fi, DisplayPort
METERLiNK/Bluetooth	Communication with headset and external sensors
Wi-Fi	Peer to peer (ad hoc) or infrastructure (network)
Audio	Microphone and speaker for voice annotation of images
USB	USB Type-C: data transfer/video/power
USB standard	USB 2.0 High Speed
Video out	DisplayPort
Video connector type	DisplayPort over USB Type-C

Radio	
Operating frequency	Bluetooth + EDR/LE: 2402–2480 MHz WLAN 2.4 GHz: 2412–2462 MHz WLAN 5 GHz: 5150–5350 MHz (DFS: only slave mode) Note that frequency band 5150–5350 MHz is for indoor use only, see national regulations.
RF output (EIRP)	Bluetooth + EDR/LE: < 10 dBm WLAN: < 17 dBm
Antenna	Integrated PIFA antenna (gain: maximum 1.4 dBi)

Power system	
Battery type	Rechargeable Li-ion battery
Battery voltage	3.6 V
Battery operating time	> 4 hours at 25°C (68°F) with typical use
Charging system	In camera (AC adapter or 12 V from a vehicle) or two-bay charger
Charging time (using two-bay charger)	3.5 h to 90% capacity, on-screen indicator
Charging temperature	0°C to +45°C (+32°F to +113°F), except for the Korean market: +10°C to +45°C (+50°F to +113°F)
External power operation	AC adapter 90–260 V AC (50/60 Hz) or 12 V from a vehicle (cable with standard plug, optional)
Power management	Automatic shut-down and sleep mode

Environmental data	
Operating temperature range	–15 to +50°C (5–122°F)
Storage temperature range	–40 to +70°C (–40 to 158°F)
Humidity (operating and storage)	IEC 60068-2-30/24 hours, 95% relative humidity, 25–40°C (77–104°F)/2 cycles
EMC	• ETSI EN 301 489-1 (radio) • ETSI EN 301 489-17 • EN 61000-6-2 (immunity) • EN 61000-6-3 (emission) • FCC 47 CFR Part 15 Class B (emission)
Radio spectrum	• ETSI EN 300 228 • FCC Part 15.249 • RSS-247 Issue 2
Encapsulation	IP 54 (IEC 60529)
Shock	25g (IEC 60068-2-27)
Vibration	2g (IEC 60068-2-6)
Safety	EN/UL/CSA/PSE 60950-1

Physical data	
Weight (including battery)	1.4 kg (3.1 lb.)
Size (L × W × H)	• Lens vertical: 150.5 × 201.3 × 84.1 mm (5.9 × 7.9 × 3.3 in.) • Lens horisontal: 150.5 × 201.3 × 167.3 mm (5.9 × 7.9 × 6.6 in.)

Physical data	
Battery weight	195 g (6.89 oz.)
Battery size (L × W × H)	59 × 66 × 94 mm (2.3 × 2.6 × 3.7 in.)
Tripod mounting	UNC ¼″-20
Housing material	PCABS with TPE, magnesium
Color	Black

Warranty and service	
Warranty	http://www.flir.com/warranty/

Shipping information	
Packaging, type	Cardboard box
Packaging, contents	• Accessory box I: ◦ Power supply for battery charger ◦ Power supply, 15 W/3 A ◦ Printed documentation ◦ SD card (8 GB) ◦ USB 2.0 A to USB Type-C cable ◦ USB Type-C to HDMI and PD adapter ◦ USB Type-C to USB Type-C cable (USB 2.0 standard) • Accessory box II: ◦ Lens cap strap ◦ Lens cleaning cloth ◦ Neck strap ◦ Small eyecup • Battery (2 ea) • Battery charger • Extra lens, 14° • Extra lens, 42° • Hard transport case • Infrared camera with lens • Lens cap, front • Lens cap, front and rear (only for extra lenses)
Packaging, size	500 × 190 × 370 mm (19.7 × 7.5 × 14.6 in.)
EAN-13	4743254004122
UPC-12	845188018955
Country of origin	Estonia

Supplies & accessories:

- T130337ACC; Calibration target
- T199588; Lens 14° + case
- T199589; Lens 24° + case
- T199590; Lens 42° + case
- T300095; Lens 6° with case
- T911630ACC; Power supply for camera, 15 W/3 A
- T911631ACC; USB 2.0 A to USB Type-C cable, 0.9 m
- T911633ACC; Power supply for battery charger
- T911705ACC; USB Type-C to USB Type-C cable (USB 2.0 standard), 1.0 m
- T911706ACC; Car adapter 12 V
- T911845ACC; USB Type-C to HDMI and PD adapter
- T911846ACC; USB 2.0 A to USB Type-C with Power supply
- T199300ACC; Battery

- T199610; Battery charger
- T199347ACC; Hard transport case
- T199616; Option, High temperature, +300 to +1200°C
- T199609; Option, Macro mode 71/103 µm for 24°
- T300030; Option, No radio
- T198495; Pouch
- T197771ACC; Bluetooth Headset
- T198583; FLIR Tools+ (download card incl. license key)
- T198696; FLIR ResearchIR Max 4 (hardware sec. dev.)
- T199013; FLIR ResearchIR Max 4 (printed license key)
- T199043; FLIR ResearchIR Max 4 Upgrade (printed license key)

27.8 FLIR T830 24° + 42°

P/N: 82505-0101
Rev.: 55399

Imaging and optical data	
Infrared resolution	320 × 240 pixels
UltraMax (super-resolution)[10]	In FLIR Tools
NETD	• <30 mK, 42° @ +30°C (+86°F) • <40 mK, 24° @ +30°C (+86°F)
Field of view	• 42° × 32° • 24° × 18°
Minimum focus distance	• 0.15 m (0.49 ft.), 42° • 0.15 m (0.49 ft.), 24° • Macro mode 103 µm as option to 24°
Minimum focus distance with MSX	• 0.65 m (2.13 ft.), 42° • 0.5 m (1.64 ft.), 24°
Focal length	• 10 mm (0.39 in.), 42° • 17 mm (0.67 in.), 24°
Spatial resolution (IFOV)	• 2.41 mrad/pixel, 42° • 1.31 mrad/pixel, 24°
Available extra lenses	• 14° (AutoCal) • 6° (service calibration required)
Lens identification	Automatic
f number	• 1.1, 42° • 1.3, 24°
Image frequency	30 Hz
Focus	• Continuous LDM • One-shot LDM • One-shot contrast • Manual
Field of view match	Yes
Digital zoom	1–4× continuous

Detector data	
Focal plane array/spectral range	Uncooled microbolometer/7.5–14 µm
Detector pitch	17 µm

Image presentation	
Resolution (display)	640 × 480 pixels (VGA)
Surface brightness (cd/m^2)	400
Screen size	4 in.
Viewing angle	80°

10. Not supported when using macro.

Image presentation	
Color depth (bits)	24
Aspect ratio	4:3
Auto-rotation	Yes
Touchscreen	Optically bonded PCAP
Display technology	IPS
Cover glass material	Dragontrail®
Programmable buttons	2
Viewfinder	Yes
Image adjustment	• Automatic • Automatic maximum • Automatic minimum • Manual

Image presentation modes	
Infrared image	Yes
Visual image	Yes
MSX	Yes
Picture in picture	Resizable and movable
Gallery	Yes

Measurement		
Camera temperature range	Object temperature range	Accuracy — for ambient temperature +15 to +35°C (+59 to +95° F)
–20 to +120°C (–4 to +248°F)	–20 to +100°C (–4 to +212°F)	±2°C (±3.6°F)
	+100 to +120°C (+212 to +248° F)	±2%
0 to +650°C (+32 to +1202°F)	0 to +100°C (+32 to +212°F)	±2°C (±3.6°F)
	+100 to + 650°C (+212 to +1202°F)	±2%
Optional +300 to +1200°C (+572 to +2192°F)	+300 to +1200°C (+572 to +2192°F)	±2%

Measurement analysis	
Spotmeter	3 in live mode
Area	3 in live mode
Automatic hot/cold detection	Automatic maximum/minimum markers within area
Measurement presets	• No measurements • Center spot • Hot spot • Cold spot • User preset 1 • User preset 2
Difference temperature	Yes
Reference temperature	Yes
Emissivity correction	Yes, variable from 0.01 to 1.0 or selected from materials list

Measurement analysis	
Measurement corrections	Yes
External optics/windows correction	Yes
Screening	0.5°C (0.9°F) accuracy at 37°C (98.6°F) with reference

Alarm	
Color alarm (isotherm)	• Above • Below • Interval • Condensation (moisture/humidity/dewpoint) • Insulation
Measurement function alarm	Audible/visual alarms (above/below) on any selected measurement function

Set-up	
Color palettes	• Iron • Gray • Rainbow • Arctic • Lava • Rainbow HC
Setup commands	Local adaptation of units, language, date, and time formats
Languages	21

Service functions	
Camera software update	Use PC software FLIR Tools

Storage of images	
Storage media	Removable memory: SD card
Time lapse (Periodic image storage)	10 seconds to 24 hours (infrared)
Remote control operation	• Using FLIR Tools (using USB cable) • FLIR Tools Mobile (over Wi-Fi)
Image file format	Standard JPEG, measurement data included. Infrared-only mode.

Image annotations	
Voice	60 seconds with built-in microphone and speaker (and via Bluetooth) on still images and video
Text	Text from predefined list or soft keyboard on touchscreen
Visual image annotation	Yes
Image sketch	Yes: on infrared only
Sketch	From touchscreen
METERLiNK	Wireless connection (Bluetooth) to: FLIR meters with METERLiNK
Laser distance meter information	Yes
Area measurement information	Yes
GPS	Location data automatically added to every still image and first frame in video from built-in GPS

Video recording in camera	
Radiometric infrared-video recording	RTRR (.csq)
Non-radiometric infrared-video recording	H.264 to memory card
Visual video recording	H.264 to memory card

Video streaming	
Radiometric infrared-video streaming (compressed)	Over UVC
Non-radiometric video streaming (compressed: IR, MSX, visual, Picture in Picture)	• H.264 (AVC) over RTSP (Wi-Fi) • MPEG4 over RTSP (Wi-Fi) • MJPEG over UVC and RTSP (Wi-Fi)
Visual video streaming	Yes

Digital camera	
Resolution	5 MP with LED light
Focus	Fixed
Field of view	53° × 41°
Video lamp	Built-in LED light

Laser pointer	
Laser alignment	Position is automatically displayed on the infrared image
Laser distance meter	Activated by dedicated button
Laser	Class 2, 0.05–40 m (0.16–131 ft.) ±1% of measured distance

Data communication interfaces	
Interfaces	USB 2.0, Bluetooth, Wi-Fi, DisplayPort
METERLiNK/Bluetooth	Communication with headset and external sensors
Wi-Fi	Peer to peer (ad hoc) or infrastructure (network)
Audio	Microphone and speaker for voice annotation of images
USB	USB Type-C: data transfer/video/power
USB standard	USB 2.0 High Speed
Video out	DisplayPort
Video connector type	DisplayPort over USB Type-C

Radio	
Operating frequency	Bluetooth + EDR/LE: 2402–2480 MHz WLAN 2.4 GHz: 2412–2462 MHz WLAN 5 GHz: 5150–5350 MHz (DFS: only slave mode) Note that frequency band 5150–5350 MHz is for indoor use only, see national regulations.
RF output (EIRP)	Bluetooth + EDR/LE: < 10 dBm WLAN: < 17 dBm
Antenna	Integrated PIFA antenna (gain: maximum 1.4 dBi)

Power system	
Battery type	Rechargeable Li-ion battery
Battery voltage	3.6 V
Battery operating time	> 4 hours at 25°C (68°F) with typical use
Charging system	In camera (AC adapter or 12 V from a vehicle) or two-bay charger
Charging time (using two-bay charger)	3.5 h to 90% capacity, on-screen indicator
Charging temperature	0°C to +45°C (+32°F to +113°F), except for the Korean market: +10°C to +45°C (+50°F to +113°F)
External power operation	AC adapter 90–260 V AC (50/60 Hz) or 12 V from a vehicle (cable with standard plug, optional)
Power management	Automatic shut-down and sleep mode

Environmental data	
Operating temperature range	–15 to +50°C (5–122°F)
Storage temperature range	–40 to +70°C (–40 to 158°F)
Humidity (operating and storage)	IEC 60068-2-30/24 hours, 95% relative humidity, 25–40°C (77–104°F)/2 cycles
EMC	• ETSI EN 301 489-1 (radio) • ETSI EN 301 489-17 • EN 61000-6-2 (immunity) • EN 61000-6-3 (emission) • FCC 47 CFR Part 15 Class B (emission)
Radio spectrum	• ETSI EN 300 228 • FCC Part 15.249 • RSS-247 Issue 2
Encapsulation	IP 54 (IEC 60529)
Shock	25g (IEC 60068-2-27)
Vibration	2g (IEC 60068-2-6)
Safety	EN/UL/CSA/PSE 60950-1

Physical data	
Weight (including battery)	1.4 kg (3.1 lb.)
Size (L × W × H)	• Lens vertical: 150.5 × 201.3 × 84.1 mm (5.9 × 7.9 × 3.3 in.) • Lens horisontal: 150.5 × 201.3 × 167.3 mm (5.9 × 7.9 × 6.6 in.)
Battery weight	195 g (6.89 oz.)
Battery size (L × W × H)	59 × 66 × 94 mm (2.3 × 2.6 × 3.7 in.)
Tripod mounting	UNC ¼″-20
Housing material	PCABS with TPE, magnesium
Color	Black

Warranty and service	
Warranty	http://www.flir.com/warranty/

Shipping information	
Packaging, type	Cardboard box
Packaging, contents	• Accessory box I: ◦ Power supply for battery charger ◦ Power supply, 15 W/3 A ◦ Printed documentation ◦ SD card (8 GB) ◦ USB 2.0 A to USB Type-C cable ◦ USB Type-C to HDMI and PD adapter ◦ USB Type-C to USB Type-C cable (USB 2.0 standard) • Accessory box II: ◦ Lens cap strap ◦ Lens cleaning cloth ◦ Neck strap ◦ Small eyecup • Battery (2 ea) • Battery charger • Extra lens, 42° • Hard transport case • Infrared camera with lens • Lens cap, front • Lens cap, front and rear (only for extra lenses)
Packaging, size	500 × 190 × 370 mm (19.7 × 7.5 × 14.6 in.)
EAN-13	4743254004115
UPC-12	845188018948
Country of origin	Estonia

Supplies & accessories:

- T130337ACC; Calibration target
- T199588; Lens 14° + case
- T199589; Lens 24° + case
- T199590; Lens 42° + case
- T300095; Lens 6° with case
- T911630ACC; Power supply for camera, 15 W/3 A
- T911631ACC; USB 2.0 A to USB Type-C cable, 0.9 m
- T911633ACC; Power supply for battery charger
- T911705ACC; USB Type-C to USB Type-C cable (USB 2.0 standard), 1.0 m
- T911706ACC; Car adapter 12 V
- T911845ACC; USB Type-C to HDMI and PD adapter
- T911846ACC; USB 2.0 A to USB Type-C with Power supply
- T199300ACC; Battery
- T199610; Battery charger
- T199347ACC; Hard transport case
- T199616; Option, High temperature, +300 to +1200°C
- T199609; Option, Macro mode 71/103 µm for 24°
- T300030; Option, No radio
- T198495; Pouch
- T197771ACC; Bluetooth Headset
- T198583; FLIR Tools+ (download card incl. license key)
- T198696; FLIR ResearchIR Max 4 (hardware sec. dev.)
- T199013; FLIR ResearchIR Max 4 (printed license key)
- T199043; FLIR ResearchIR Max 4 Upgrade (printed license key)

27.9 FLIR T830 42°

P/N: 82503-0101
Rev.: 55401

Imaging and optical data	
Infrared resolution	320 × 240 pixels
UltraMax (super-resolution)[11]	In FLIR Tools
NETD	<30 mK @ +30°C (+86°F)
Field of view	42° × 32°
Minimum focus distance	0.15 m (0.49 ft.)
Minimum focus distance with MSX	0.65 m (2.13 ft.)
Focal length	10 mm (0.39 in.)
Spatial resolution (IFOV)	2.41 mrad/pixel
Available extra lenses	• 24° (AutoCal) • 14° (AutoCal) • 6° (service calibration required)
Lens identification	Automatic
f number	1.1
Image frequency	30 Hz
Focus	• Continuous LDM • One-shot LDM • One-shot contrast • Manual
Field of view match	Yes
Digital zoom	1–4× continuous

Detector data	
Focal plane array/spectral range	Uncooled microbolometer/7.5–14 µm
Detector pitch	17 µm

Image presentation	
Resolution (display)	640 × 480 pixels (VGA)
Surface brightness (cd/m^2)	400
Screen size	4 in.
Viewing angle	80°
Color depth (bits)	24
Aspect ratio	4:3
Auto-rotation	Yes
Touchscreen	Optically bonded PCAP
Display technology	IPS
Cover glass material	Dragontrail®
Programmable buttons	2

11. Not supported when using macro.

Image presentation	
Viewfinder	Yes
Image adjustment	• Automatic • Automatic maximum • Automatic minimum • Manual

Image presentation modes	
Infrared image	Yes
Visual image	Yes
MSX	Yes
Picture in picture	Resizable and movable
Gallery	Yes

Measurement		
Camera temperature range	Object temperature range	Accuracy — for ambient temperature +15 to +35°C (+59 to +95° F)
–20 to +120°C (–4 to +248°F)	–20 to +100°C (–4 to +212°F)	±2°C (±3.6°F)
	+100 to +120°C (+212 to +248° F)	±2%
0 to +650°C (+32 to +1202°F)	0 to +100°C (+32 to +212°F)	±2°C (±3.6°F)
	+100 to + 650°C (+212 to +1202°F)	±2%
Optional +300 to +1200°C (+572 to +2192°F)	+300 to +1200°C (+572 to +2192°F)	±2%

Measurement analysis	
Spotmeter	3 in live mode
Area	3 in live mode
Automatic hot/cold detection	Automatic maximum/minimum markers within area
Measurement presets	• No measurements • Center spot • Hot spot • Cold spot • User preset 1 • User preset 2
Difference temperature	Yes
Reference temperature	Yes
Emissivity correction	Yes, variable from 0.01 to 1.0 or selected from materials list
Measurement corrections	Yes
External optics/windows correction	Yes
Screening	0.5°C (0.9°F) accuracy at 37°C (98.6°F) with reference

Alarm	
Color alarm (isotherm)	• Above • Below • Interval • Condensation (moisture/humidity/dewpoint) • Insulation
Measurement function alarm	Audible/visual alarms (above/below) on any selected measurement function

Set-up	
Color palettes	• Iron • Gray • Rainbow • Arctic • Lava • Rainbow HC
Setup commands	Local adaptation of units, language, date, and time formats
Languages	21

Service functions	
Camera software update	Use PC software FLIR Tools

Storage of images	
Storage media	Removable memory: SD card
Time lapse (Periodic image storage)	10 seconds to 24 hours (infrared)
Remote control operation	• Using FLIR Tools (using USB cable) • FLIR Tools Mobile (over Wi-Fi)
Image file format	Standard JPEG, measurement data included. Infrared-only mode.

Image annotations	
Voice	60 seconds with built-in microphone and speaker (and via Bluetooth) on still images and video
Text	Text from predefined list or soft keyboard on touchscreen
Visual image annotation	Yes
Image sketch	Yes: on infrared only
Sketch	From touchscreen
METERLiNK	Wireless connection (Bluetooth) to: FLIR meters with METERLiNK
Laser distance meter information	Yes
Area measurement information	Yes
GPS	Location data automatically added to every still image and first frame in video from built-in GPS

Video recording in camera	
Radiometric infrared-video recording	RTRR (.csq)
Non-radiometric infrared-video recording	H.264 to memory card
Visual video recording	H.264 to memory card

Video streaming	
Radiometric infrared-video streaming (compressed)	Over UVC
Non-radiometric video streaming (compressed: IR, MSX, visual, Picture in Picture)	• H.264 (AVC) over RTSP (Wi-Fi) • MPEG4 over RTSP (Wi-Fi) • MJPEG over UVC and RTSP (Wi-Fi)
Visual video streaming	Yes

Digital camera	
Resolution	5 MP with LED light
Focus	Fixed
Field of view	53° × 41°
Video lamp	Built-in LED light

Laser pointer	
Laser alignment	Position is automatically displayed on the infrared image
Laser distance meter	Activated by dedicated button
Laser	Class 2, 0.05–40 m (0.16–131 ft.) ±1% of measured distance

Data communication interfaces	
Interfaces	USB 2.0, Bluetooth, Wi-Fi, DisplayPort
METERLiNK/Bluetooth	Communication with headset and external sensors
Wi-Fi	Peer to peer (ad hoc) or infrastructure (network)
Audio	Microphone and speaker for voice annotation of images
USB	USB Type-C: data transfer/video/power
USB standard	USB 2.0 High Speed
Video out	DisplayPort
Video connector type	DisplayPort over USB Type-C

Radio	
Operating frequency	Bluetooth + EDR/LE: 2402–2480 MHz WLAN 2.4 GHz: 2412–2462 MHz WLAN 5 GHz: 5150–5350 MHz (DFS: only slave mode) Note that frequency band 5150–5350 MHz is for indoor use only, see national regulations.
RF output (EIRP)	Bluetooth + EDR/LE: < 10 dBm WLAN: < 17 dBm
Antenna	Integrated PIFA antenna (gain: maximum 1.4 dBi)

Power system	
Battery type	Rechargeable Li-ion battery
Battery voltage	3.6 V
Battery operating time	> 4 hours at 25°C (68°F) with typical use

Power system	
Charging system	In camera (AC adapter or 12 V from a vehicle) or two-bay charger
Charging time (using two-bay charger)	3.5 h to 90% capacity, on-screen indicator
Charging temperature	0°C to +45°C (+32°F to +113°F), except for the Korean market: +10°C to +45°C (+50°F to +113°F)
External power operation	AC adapter 90–260 V AC (50/60 Hz) or 12 V from a vehicle (cable with standard plug, optional)
Power management	Automatic shut-down and sleep mode

Environmental data	
Operating temperature range	–15 to +50°C (5–122°F)
Storage temperature range	–40 to +70°C (–40 to 158°F)
Humidity (operating and storage)	IEC 60068-2-30/24 hours, 95% relative humidity, 25–40°C (77–104°F)/2 cycles
EMC	• ETSI EN 301 489-1 (radio) • ETSI EN 301 489-17 • EN 61000-6-2 (immunity) • EN 61000-6-3 (emission) • FCC 47 CFR Part 15 Class B (emission)
Radio spectrum	• ETSI EN 300 228 • FCC Part 15.249 • RSS-247 Issue 2
Encapsulation	IP 54 (IEC 60529)
Shock	25g (IEC 60068-2-27)
Vibration	2g (IEC 60068-2-6)
Safety	EN/UL/CSA/PSE 60950-1

Physical data	
Weight (including battery)	1.4 kg (3.1 lb.)
Size (L × W × H)	• Lens vertical: 150.5 × 201.3 × 84.1 mm (5.9 × 7.9 × 3.3 in.) • Lens horisontal: 150.5 × 201.3 × 167.3 mm (5.9 × 7.9 × 6.6 in.)
Battery weight	195 g (6.89 oz.)
Battery size (L × W × H)	59 × 66 × 94 mm (2.3 × 2.6 × 3.7 in.)
Tripod mounting	UNC ¼″-20
Housing material	PCABS with TPE, magnesium
Color	Black

Warranty and service	
Warranty	http://www.flir.com/warranty/

Shipping information	
Packaging, type	Cardboard box
Packaging, contents	• Accessory box I: ◦ Power supply for battery charger ◦ Power supply, 15 W/3 A ◦ Printed documentation ◦ SD card (8 GB) ◦ USB 2.0 A to USB Type-C cable ◦ USB Type-C to HDMI and PD adapter ◦ USB Type-C to USB Type-C cable (USB 2.0 standard) • Accessory box II: ◦ Lens cap strap ◦ Lens cleaning cloth ◦ Neck strap ◦ Small eyecup • Battery (2 ea) • Battery charger • Hard transport case • Infrared camera with lens • Lens cap, front • Lens cap, front and rear (only for extra lenses)
Packaging, size	500 × 190 × 370 mm (19.7 × 7.5 × 14.6 in.)
EAN-13	4743254004139
UPC-12	845188018962
Country of origin	Estonia

Supplies & accessories:

- T130337ACC; Calibration target
- T199588; Lens 14° + case
- T199589; Lens 24° + case
- T199590; Lens 42° + case
- T300095; Lens 6° with case
- T911630ACC; Power supply for camera, 15 W/3 A
- T911631ACC; USB 2.0 A to USB Type-C cable, 0.9 m
- T911633ACC; Power supply for battery charger
- T911705ACC; USB Type-C to USB Type-C cable (USB 2.0 standard), 1.0 m
- T911706ACC; Car adapter 12 V
- T911845ACC; USB Type-C to HDMI and PD adapter
- T911846ACC; USB 2.0 A to USB Type-C with Power supply
- T199300ACC; Battery
- T199610; Battery charger
- T199347ACC; Hard transport case
- T199616; Option, High temperature, +300 to +1200°C
- T199609; Option, Macro mode 71/103 µm for 24°
- T300030; Option, No radio
- T198495; Pouch
- T197771ACC; Bluetooth Headset
- T198583; FLIR Tools+ (download card incl. license key)
- T198696; FLIR ResearchIR Max 4 (hardware sec. dev.)
- T199013; FLIR ResearchIR Max 4 (printed license key)
- T199043; FLIR ResearchIR Max 4 Upgrade (printed license key)

27.10 FLIR T830 42°+ 14°

P/N: 82507-0101
Rev.: 55397

Imaging and optical data	
Infrared resolution	320 × 240 pixels
UltraMax (super-resolution)[12]	In FLIR Tools
NETD	• <30 mK, 42° @ +30°C (+86°F) • <50 mK, 14° @ +30°C (+86°F)
Field of view	• 42° × 32° • 14° × 10°
Minimum focus distance	• 0.15 m (0.49 ft.), 42° • 1.0 m (3.28 ft.), 14°
Minimum focus distance with MSX	• 0.65 m (2.13 ft.), 42° • 1.0 m (3.28 ft.), 14°
Focal length	• 10 mm (0.39 in.), 42° • 29 mm (1.41 in.), 14°
Spatial resolution (IFOV)	• 2.41 mrad/pixel, 42° • 0.75 mrad/pixel, 14°
Available extra lenses	• 24° (AutoCal) • 6° (service calibration required)
Lens identification	Automatic
f number	• 1.1, 42° • 1.5, 14°
Image frequency	30 Hz
Focus	• Continuous LDM • One-shot LDM • One-shot contrast • Manual
Field of view match	Yes
Digital zoom	1–4× continuous

Detector data	
Focal plane array/spectral range	Uncooled microbolometer/7.5–14 µm
Detector pitch	17 µm

Image presentation	
Resolution (display)	640 × 480 pixels (VGA)
Surface brightness (cd/m^2)	400
Screen size	4 in.
Viewing angle	80°
Color depth (bits)	24

12. Not supported when using macro.

Image presentation	
Aspect ratio	4:3
Auto-rotation	Yes
Touchscreen	Optically bonded PCAP
Display technology	IPS
Cover glass material	Dragontrail®
Programmable buttons	2
Viewfinder	Yes
Image adjustment	• Automatic • Automatic maximum • Automatic minimum • Manual

Image presentation modes	
Infrared image	Yes
Visual image	Yes
MSX	Yes
Picture in picture	Resizable and movable
Gallery	Yes

Measurement		
Camera temperature range	Object temperature range	Accuracy — for ambient temperature +15 to +35°C (+59 to +95° F)
–20 to +120°C (–4 to +248°F)	–20 to +100°C (–4 to +212°F)	±2°C (±3.6°F)
	+100 to +120°C (+212 to +248° F)	±2%
0 to +650°C (+32 to +1202°F)	0 to +100°C (+32 to +212°F)	±2°C (±3.6°F)
	+100 to + 650°C (+212 to +1202°F)	±2%
Optional +300 to +1200°C (+572 to +2192°F)	+300 to +1200°C (+572 to +2192°F)	±2%

Measurement analysis	
Spotmeter	3 in live mode
Area	3 in live mode
Automatic hot/cold detection	Automatic maximum/minimum markers within area
Measurement presets	• No measurements • Center spot • Hot spot • Cold spot • User preset 1 • User preset 2
Difference temperature	Yes
Reference temperature	Yes
Emissivity correction	Yes, variable from 0.01 to 1.0 or selected from materials list
Measurement corrections	Yes

Measurement analysis	
External optics/windows correction	Yes
Screening	0.5°C (0.9°F) accuracy at 37°C (98.6°F) with reference

Alarm	
Color alarm (isotherm)	• Above • Below • Interval • Condensation (moisture/humidity/dewpoint) • Insulation
Measurement function alarm	Audible/visual alarms (above/below) on any selected measurement function

Set-up	
Color palettes	• Iron • Gray • Rainbow • Arctic • Lava • Rainbow HC
Setup commands	Local adaptation of units, language, date, and time formats
Languages	21

Service functions	
Camera software update	Use PC software FLIR Tools

Storage of images	
Storage media	Removable memory: SD card
Time lapse (Periodic image storage)	10 seconds to 24 hours (infrared)
Remote control operation	• Using FLIR Tools (using USB cable) • FLIR Tools Mobile (over Wi-Fi)
Image file format	Standard JPEG, measurement data included. Infrared-only mode.

Image annotations	
Voice	60 seconds with built-in microphone and speaker (and via Bluetooth) on still images and video
Text	Text from predefined list or soft keyboard on touchscreen
Visual image annotation	Yes
Image sketch	Yes: on infrared only
Sketch	From touchscreen
METERLiNK	Wireless connection (Bluetooth) to: FLIR meters with METERLiNK
Laser distance meter information	Yes
Area measurement information	Yes
GPS	Location data automatically added to every still image and first frame in video from built-in GPS

Video recording in camera	
Radiometric infrared-video recording	RTRR (.csq)
Non-radiometric infrared-video recording	H.264 to memory card
Visual video recording	H.264 to memory card

Video streaming	
Radiometric infrared-video streaming (compressed)	Over UVC
Non-radiometric video streaming (compressed: IR, MSX, visual, Picture in Picture)	• H.264 (AVC) over RTSP (Wi-Fi) • MPEG4 over RTSP (Wi-Fi) • MJPEG over UVC and RTSP (Wi-Fi)
Visual video streaming	Yes

Digital camera	
Resolution	5 MP with LED light
Focus	Fixed
Field of view	53° × 41°
Video lamp	Built-in LED light

Laser pointer	
Laser alignment	Position is automatically displayed on the infrared image
Laser distance meter	Activated by dedicated button
Laser	Class 2, 0.05–40 m (0.16–131 ft.) ±1% of measured distance

Data communication interfaces	
Interfaces	USB 2.0, Bluetooth, Wi-Fi, DisplayPort
METERLiNK/Bluetooth	Communication with headset and external sensors
Wi-Fi	Peer to peer (ad hoc) or infrastructure (network)
Audio	Microphone and speaker for voice annotation of images
USB	USB Type-C: data transfer/video/power
USB standard	USB 2.0 High Speed
Video out	DisplayPort
Video connector type	DisplayPort over USB Type-C

Radio	
Operating frequency	Bluetooth + EDR/LE: 2402–2480 MHz WLAN 2.4 GHz: 2412–2462 MHz WLAN 5 GHz: 5150–5350 MHz (DFS: only slave mode) Note that frequency band 5150–5350 MHz is for indoor use only, see national regulations.
RF output (EIRP)	Bluetooth + EDR/LE: < 10 dBm WLAN: < 17 dBm
Antenna	Integrated PIFA antenna (gain: maximum 1.4 dBi)

Power system	
Battery type	Rechargeable Li-ion battery
Battery voltage	3.6 V
Battery operating time	> 4 hours at 25°C (68°F) with typical use
Charging system	In camera (AC adapter or 12 V from a vehicle) or two-bay charger
Charging time (using two-bay charger)	3.5 h to 90% capacity, on-screen indicator
Charging temperature	0°C to +45°C (+32°F to +113°F), except for the Korean market: +10°C to +45°C (+50°F to +113°F)
External power operation	AC adapter 90–260 V AC (50/60 Hz) or 12 V from a vehicle (cable with standard plug, optional)
Power management	Automatic shut-down and sleep mode

Environmental data	
Operating temperature range	–15 to +50°C (5–122°F)
Storage temperature range	–40 to +70°C (–40 to 158°F)
Humidity (operating and storage)	IEC 60068-2-30/24 hours, 95% relative humidity, 25–40°C (77–104°F)/2 cycles
EMC	• ETSI EN 301 489-1 (radio) • ETSI EN 301 489-17 • EN 61000-6-2 (immunity) • EN 61000-6-3 (emission) • FCC 47 CFR Part 15 Class B (emission)
Radio spectrum	• ETSI EN 300 228 • FCC Part 15.249 • RSS-247 Issue 2
Encapsulation	IP 54 (IEC 60529)
Shock	25g (IEC 60068-2-27)
Vibration	2g (IEC 60068-2-6)
Safety	EN/UL/CSA/PSE 60950-1

Physical data	
Weight (including battery)	1.4 kg (3.1 lb.)
Size (L × W × H)	• Lens vertical: 150.5 × 201.3 × 84.1 mm (5.9 × 7.9 × 3.3 in.) • Lens horisontal: 150.5 × 201.3 × 167.3 mm (5.9 × 7.9 × 6.6 in.)
Battery weight	195 g (6.89 oz.)
Battery size (L × W × H)	59 × 66 × 94 mm (2.3 × 2.6 × 3.7 in.)
Tripod mounting	UNC ¼″-20
Housing material	PCABS with TPE, magnesium
Color	Black

Warranty and service	
Warranty	http://www.flir.com/warranty/

Shipping information	
Packaging, type	Cardboard box
Packaging, contents	• Accessory box I: ◦ Power supply for battery charger ◦ Power supply, 15 W/3 A ◦ Printed documentation ◦ SD card (8 GB) ◦ USB 2.0 A to USB Type-C cable ◦ USB Type-C to HDMI and PD adapter ◦ USB Type-C to USB Type-C cable (USB 2.0 standard) • Accessory box II: ◦ Lens cap strap ◦ Lens cleaning cloth ◦ Neck strap ◦ Small eyecup • Battery (2 ea) • Battery charger • Extra lens, 14° • Hard transport case • Infrared camera with lens • Lens cap, front • Lens cap, front and rear (only for extra lenses)
Packaging, size	500 × 190 × 370 mm (19.7 × 7.5 × 14.6 in.)
EAN-13	4743254004146
UPC-12	845188018979
Country of origin	Estonia

Supplies & accessories:

- T130337ACC; Calibration target
- T199588; Lens 14° + case
- T199589; Lens 24° + case
- T199590; Lens 42° + case
- T300095; Lens 6° with case
- T911630ACC; Power supply for camera, 15 W/3 A
- T911631ACC; USB 2.0 A to USB Type-C cable, 0.9 m
- T911633ACC; Power supply for battery charger
- T911705ACC; USB Type-C to USB Type-C cable (USB 2.0 standard), 1.0 m
- T911706ACC; Car adapter 12 V
- T911845ACC; USB Type-C to HDMI and PD adapter
- T911846ACC; USB 2.0 A to USB Type-C with Power supply
- T199300ACC; Battery
- T199610; Battery charger
- T199347ACC; Hard transport case
- T199616; Option, High temperature, +300 to +1200°C
- T199609; Option, Macro mode 71/103 µm for 24°
- T300030; Option, No radio
- T198495; Pouch
- T197771ACC; Bluetooth Headset
- T198583; FLIR Tools+ (download card incl. license key)
- T198696; FLIR ResearchIR Max 4 (hardware sec. dev.)
- T199013; FLIR ResearchIR Max 4 (printed license key)
- T199043; FLIR ResearchIR Max 4 Upgrade (printed license key)

27.11 FLIR T840 14°

P/N: 82501-0201
Rev.: 55396

Imaging and optical data	
Infrared resolution	464 × 348 pixels
UltraMax (super-resolution)[13]	In FLIR Tools
NETD	<50 mK @ +30°C (+86°F)
Field of view	14° × 10°
Minimum focus distance	1.0 m (3.28 ft.)
Minimum focus distance with MSX	1.0 m (3.28 ft.)
Focal length	29 mm (1.41 in.)
Spatial resolution (IFOV)	0.52 mrad/pixel
Available extra lenses	• 42° (AutoCal) • 24° (AutoCal) • 6° (service calibration required)
Lens identification	Automatic
f number	1.5
Image frequency	30 Hz
Focus	• Continuous LDM • One-shot LDM • One-shot contrast • Manual
Field of view match	Yes
Digital zoom	1–6× continuous

Detector data	
Focal plane array/spectral range	Uncooled microbolometer/7.5–14 µm
Detector pitch	17 µm

Image presentation	
Resolution (display)	640 × 480 pixels (VGA)
Surface brightness (cd/m^2)	400
Screen size	4 in.
Viewing angle	80°
Color depth (bits)	24
Aspect ratio	4:3
Auto-rotation	Yes
Touchscreen	Optically bonded PCAP
Display technology	IPS
Cover glass material	Dragontrail®
Programmable buttons	2

13. Not supported when using macro.

Image presentation	
Viewfinder	Yes
Image adjustment	• Automatic • Automatic maximum • Automatic minimum • Manual

Image presentation modes	
Infrared image	Yes
Visual image	Yes
MSX	Yes
Picture in picture	Resizable and movable
Gallery	Yes

Measurement		
Camera temperature range	Object temperature range	Accuracy — for ambient temperature +15 to +35°C (+59 to +95° F)
–20 to +120°C (–4 to +248°F)	–20 to +100°C (–4 to +212°F)	±2°C (±3.6°F)
	+100 to +120°C (+212 to +248° F)	±2%
0 to +650°C (+32 to +1202°F)	0 to +100°C (+32 to +212°F)	±2°C (±3.6°F)
	+100 to + 650°C (+212 to +1202°F)	±2%
+300 to +1500°C (+572 to +2732°F)	+300 to +1500°C (+572 to +2732°F)	±2%

Measurement analysis	
Spotmeter	3 in live mode
Area	3 in live mode
Automatic hot/cold detection	Automatic maximum/minimum markers within area
Measurement presets	• No measurements • Center spot • Hot spot • Cold spot • User preset 1 • User preset 2
Difference temperature	Yes
Reference temperature	Yes
Emissivity correction	Yes, variable from 0.01 to 1.0 or selected from materials list
Measurement corrections	Yes
External optics/windows correction	Yes
Screening	0.5°C (0.9°F) accuracy at 37°C (98.6°F) with reference

Alarm	
Color alarm (isotherm)	• Above • Below • Interval • Condensation (moisture/humidity/dewpoint) • Insulation
Measurement function alarm	Audible/visual alarms (above/below) on any selected measurement function

Set-up	
Color palettes	• Iron • Gray • Rainbow • Arctic • Lava • Rainbow HC
Setup commands	Local adaptation of units, language, date, and time formats
Languages	21

Service functions	
Camera software update	Use PC software FLIR Tools

Storage of images	
Storage media	Removable memory: SD card
Time lapse (Periodic image storage)	10 seconds to 24 hours (infrared)
Remote control operation	• Using FLIR Tools (using USB cable) • FLIR Tools Mobile (over Wi-Fi)
Image file format	Standard JPEG, measurement data included. Infrared-only mode.

Image annotations	
Voice	60 seconds with built-in microphone and speaker (and via Bluetooth) on still images and video
Text	Text from predefined list or soft keyboard on touchscreen
Visual image annotation	Yes
Image sketch	Yes: on infrared only
Sketch	From touchscreen
METERLiNK	Wireless connection (Bluetooth) to: FLIR meters with METERLiNK
Laser distance meter information	Yes
Area measurement information	Yes
GPS	Location data automatically added to every still image and first frame in video from built-in GPS

Video recording in camera	
Radiometric infrared-video recording	RTRR (.csq)
Non-radiometric infrared-video recording	H.264 to memory card
Visual video recording	H.264 to memory card

Video streaming	
Radiometric infrared-video streaming (compressed)	Over UVC
Non-radiometric video streaming (compressed: IR, MSX, visual, Picture in Picture)	• H.264 (AVC) over RTSP (Wi-Fi) • MPEG4 over RTSP (Wi-Fi) • MJPEG over UVC and RTSP (Wi-Fi)
Visual video streaming	Yes

Digital camera	
Resolution	5 MP with LED light
Focus	Fixed
Field of view	53° × 41°
Video lamp	Built-in LED light

Laser pointer	
Laser alignment	Position is automatically displayed on the infrared image
Laser distance meter	Activated by dedicated button
Laser	Class 2, 0.05–40 m (0.16–131 ft.) ±1% of measured distance

Data communication interfaces	
Interfaces	USB 2.0, Bluetooth, Wi-Fi, DisplayPort
METERLiNK/Bluetooth	Communication with headset and external sensors
Wi-Fi	Peer to peer (ad hoc) or infrastructure (network)
Audio	Microphone and speaker for voice annotation of images
USB	USB Type-C: data transfer/video/power
USB standard	USB 2.0 High Speed
Video out	DisplayPort
Video connector type	DisplayPort over USB Type-C

Radio	
Operating frequency	Bluetooth + EDR/LE: 2402–2480 MHz WLAN 2.4 GHz: 2412–2462 MHz WLAN 5 GHz: 5150–5350 MHz (DFS: only slave mode) Note that frequency band 5150–5350 MHz is for indoor use only, see national regulations.
RF output (EIRP)	Bluetooth + EDR/LE: < 10 dBm WLAN: < 17 dBm
Antenna	Integrated PIFA antenna (gain: maximum 1.4 dBi)

Power system	
Battery type	Rechargeable Li-ion battery
Battery voltage	3.6 V
Battery operating time	> 4 hours at 25°C (68°F) with typical use

Power system	
Charging system	In camera (AC adapter or 12 V from a vehicle) or two-bay charger
Charging time (using two-bay charger)	3.5 h to 90% capacity, on-screen indicator
Charging temperature	0°C to +45°C (+32°F to +113°F), except for the Korean market: +10°C to +45°C (+50°F to +113°F)
External power operation	AC adapter 90–260 V AC (50/60 Hz) or 12 V from a vehicle (cable with standard plug, optional)
Power management	Automatic shut-down and sleep mode

Environmental data	
Operating temperature range	–15 to +50°C (5–122°F)
Storage temperature range	–40 to +70°C (–40 to 158°F)
Humidity (operating and storage)	IEC 60068-2-30/24 hours, 95% relative humidity, 25–40°C (77–104°F)/2 cycles
EMC	• ETSI EN 301 489-1 (radio) • ETSI EN 301 489-17 • EN 61000-6-2 (immunity) • EN 61000-6-3 (emission) • FCC 47 CFR Part 15 Class B (emission)
Radio spectrum	• ETSI EN 300 228 • FCC Part 15.249 • RSS-247 Issue 2
Encapsulation	IP 54 (IEC 60529)
Shock	25g (IEC 60068-2-27)
Vibration	2g (IEC 60068-2-6)
Safety	EN/UL/CSA/PSE 60950-1

Physical data	
Weight (including battery)	1.4 kg (3.1 lb.)
Size (L × W × H)	• Lens vertical: 150.5 × 201.3 × 84.1 mm (5.9 × 7.9 × 3.3 in.) • Lens horisontal: 150.5 × 201.3 × 167.3 mm (5.9 × 7.9 × 6.6 in.)
Battery weight	195 g (6.89 oz.)
Battery size (L × W × H)	59 × 66 × 94 mm (2.3 × 2.6 × 3.7 in.)
Tripod mounting	UNC ¼″-20
Housing material	PCABS with TPE, magnesium
Color	Black

Warranty and service	
Warranty	http://www.flir.com/warranty/

Shipping information	
Packaging, type	Cardboard box
Packaging, contents	• Accessory box I: ◦ Power supply for battery charger ◦ Power supply, 15 W/3 A ◦ Printed documentation ◦ SD card (8 GB) ◦ USB 2.0 A to USB Type-C cable ◦ USB Type-C to HDMI and PD adapter ◦ USB Type-C to USB Type-C cable (USB 2.0 standard) • Accessory box II: ◦ Lens cap strap ◦ Lens cleaning cloth ◦ Neck strap ◦ Small eyecup • Battery (2 ea) • Battery charger • Hard transport case • Infrared camera with lens • Lens cap, front • Lens cap, front and rear (only for extra lenses)
Packaging, size	500 × 190 × 370 mm (19.7 × 7.5 × 14.6 in.)
EAN-13	4743254004153
UPC-12	845188018986
Country of origin	Estonia

Supplies & accessories:

- T130337ACC; Calibration target
- T199588; Lens 14° + case
- T199589; Lens 24° + case
- T199590; Lens 42° + case
- T300095; Lens 6° with case
- T911630ACC; Power supply for camera, 15 W/3 A
- T911631ACC; USB 2.0 A to USB Type-C cable, 0.9 m
- T911633ACC; Power supply for battery charger
- T911705ACC; USB Type-C to USB Type-C cable (USB 2.0 standard), 1.0 m
- T911706ACC; Car adapter 12 V
- T911845ACC; USB Type-C to HDMI and PD adapter
- T911846ACC; USB 2.0 A to USB Type-C with Power supply
- T199300ACC; Battery
- T199610; Battery charger
- T199347ACC; Hard transport case
- T199609; Option, Macro mode 71/103 µm for 24°
- T300030; Option, No radio
- T198495; Pouch
- T197771ACC; Bluetooth Headset
- T198583; FLIR Tools+ (download card incl. license key)
- T198696; FLIR ResearchIR Max 4 (hardware sec. dev.)
- T199013; FLIR ResearchIR Max 4 (printed license key)
- T199043; FLIR ResearchIR Max 4 Upgrade (printed license key)

27.12 FLIR T840 24°

P/N: 82502-0201
Rev.: 55395

Imaging and optical data	
Infrared resolution	464 × 348 pixels
UltraMax (super-resolution)[14]	In FLIR Tools
NETD	<40 mK @ +30°C (+86°F)
Field of view	24° × 18°
Minimum focus distance	• 0.15 m (0.49 ft.) • Macro mode 71 µm as option
Minimum focus distance with MSX	0.5 m (1.64 ft.)
Focal length	17 mm (0.67 in.)
Spatial resolution (IFOV)	0.90 mrad/pixel
Available extra lenses	• 42° (AutoCal) • 14° (AutoCal) • 6° (service calibration required)
Lens identification	Automatic
f number	1.3
Image frequency	30 Hz
Focus	• Continuous LDM • One-shot LDM • One-shot contrast • Manual
Field of view match	Yes
Digital zoom	1–6× continuous

Detector data	
Focal plane array/spectral range	Uncooled microbolometer/7.5–14 µm
Detector pitch	17 µm

Image presentation	
Resolution (display)	640 × 480 pixels (VGA)
Surface brightness (cd/m^2)	400
Screen size	4 in.
Viewing angle	80°
Color depth (bits)	24
Aspect ratio	4:3
Auto-rotation	Yes
Touchscreen	Optically bonded PCAP
Display technology	IPS
Cover glass material	Dragontrail®

14. Not supported when using macro.

Image presentation	
Programmable buttons	2
Viewfinder	Yes
Image adjustment	• Automatic • Automatic maximum • Automatic minimum • Manual

Image presentation modes	
Infrared image	Yes
Visual image	Yes
MSX	Yes
Picture in picture	Resizable and movable
Gallery	Yes

Measurement		
Camera temperature range	Object temperature range	Accuracy — for ambient temperature +15 to +35°C (+59 to +95° F)
–20 to +120°C (–4 to +248°F)	–20 to +100°C (–4 to +212°F)	±2°C (±3.6°F)
	+100 to +120°C (+212 to +248° F)	±2%
0 to +650°C (+32 to +1202°F)	0 to +100°C (+32 to +212°F)	±2°C (±3.6°F)
	+100 to + 650°C (+212 to +1202°F)	±2%
+300 to +1500°C (+572 to +2732°F)	+300 to +1500°C (+572 to +2732°F)	±2%

Measurement analysis	
Spotmeter	3 in live mode
Area	3 in live mode
Automatic hot/cold detection	Automatic maximum/minimum markers within area
Measurement presets	• No measurements • Center spot • Hot spot • Cold spot • User preset 1 • User preset 2
Difference temperature	Yes
Reference temperature	Yes
Emissivity correction	Yes, variable from 0.01 to 1.0 or selected from materials list
Measurement corrections	Yes
External optics/windows correction	Yes
Screening	0.5°C (0.9°F) accuracy at 37°C (98.6°F) with reference

Alarm	
Color alarm (isotherm)	• Above • Below • Interval • Condensation (moisture/humidity/dewpoint) • Insulation
Measurement function alarm	Audible/visual alarms (above/below) on any selected measurement function

Set-up	
Color palettes	• Iron • Gray • Rainbow • Arctic • Lava • Rainbow HC
Setup commands	Local adaptation of units, language, date, and time formats
Languages	21

Service functions	
Camera software update	Use PC software FLIR Tools

Storage of images	
Storage media	Removable memory: SD card
Time lapse (Periodic image storage)	10 seconds to 24 hours (infrared)
Remote control operation	• Using FLIR Tools (using USB cable) • FLIR Tools Mobile (over Wi-Fi)
Image file format	Standard JPEG, measurement data included. Infrared-only mode.

Image annotations	
Voice	60 seconds with built-in microphone and speaker (and via Bluetooth) on still images and video
Text	Text from predefined list or soft keyboard on touchscreen
Visual image annotation	Yes
Image sketch	Yes: on infrared only
Sketch	From touchscreen
METERLiNK	Wireless connection (Bluetooth) to: FLIR meters with METERLiNK
Laser distance meter information	Yes
Area measurement information	Yes
GPS	Location data automatically added to every still image and first frame in video from built-in GPS

Video recording in camera	
Radiometric infrared-video recording	RTRR (.csq)
Non-radiometric infrared-video recording	H.264 to memory card
Visual video recording	H.264 to memory card

Video streaming	
Radiometric infrared-video streaming (compressed)	Over UVC
Non-radiometric video streaming (compressed: IR, MSX, visual, Picture in Picture)	• H.264 (AVC) over RTSP (Wi-Fi) • MPEG4 over RTSP (Wi-Fi) • MJPEG over UVC and RTSP (Wi-Fi)
Visual video streaming	Yes

Digital camera	
Resolution	5 MP with LED light
Focus	Fixed
Field of view	53° × 41°
Video lamp	Built-in LED light

Laser pointer	
Laser alignment	Position is automatically displayed on the infrared image
Laser distance meter	Activated by dedicated button
Laser	Class 2, 0.05–40 m (0.16–131 ft.) ±1% of measured distance

Data communication interfaces	
Interfaces	USB 2.0, Bluetooth, Wi-Fi, DisplayPort
METERLiNK/Bluetooth	Communication with headset and external sensors
Wi-Fi	Peer to peer (ad hoc) or infrastructure (network)
Audio	Microphone and speaker for voice annotation of images
USB	USB Type-C: data transfer/video/power
USB standard	USB 2.0 High Speed
Video out	DisplayPort
Video connector type	DisplayPort over USB Type-C

Radio	
Operating frequency	Bluetooth + EDR/LE: 2402–2480 MHz WLAN 2.4 GHz: 2412–2462 MHz WLAN 5 GHz: 5150–5350 MHz (DFS: only slave mode) Note that frequency band 5150–5350 MHz is for indoor use only, see national regulations.
RF output (EIRP)	Bluetooth + EDR/LE: < 10 dBm WLAN: < 17 dBm
Antenna	Integrated PIFA antenna (gain: maximum 1.4 dBi)

Power system	
Battery type	Rechargeable Li-ion battery
Battery voltage	3.6 V
Battery operating time	> 4 hours at 25°C (68°F) with typical use

Power system	
Charging system	In camera (AC adapter or 12 V from a vehicle) or two-bay charger
Charging time (using two-bay charger)	3.5 h to 90% capacity, on-screen indicator
Charging temperature	0°C to +45°C (+32°F to +113°F), except for the Korean market: +10°C to +45°C (+50°F to +113°F)
External power operation	AC adapter 90–260 V AC (50/60 Hz) or 12 V from a vehicle (cable with standard plug, optional)
Power management	Automatic shut-down and sleep mode

Environmental data	
Operating temperature range	–15 to +50°C (5–122°F)
Storage temperature range	–40 to +70°C (–40 to 158°F)
Humidity (operating and storage)	IEC 60068-2-30/24 hours, 95% relative humidity, 25–40°C (77–104°F)/2 cycles
EMC	• ETSI EN 301 489-1 (radio) • ETSI EN 301 489-17 • EN 61000-6-2 (immunity) • EN 61000-6-3 (emission) • FCC 47 CFR Part 15 Class B (emission)
Radio spectrum	• ETSI EN 300 228 • FCC Part 15.249 • RSS-247 Issue 2
Encapsulation	IP 54 (IEC 60529)
Shock	25g (IEC 60068-2-27)
Vibration	2g (IEC 60068-2-6)
Safety	EN/UL/CSA/PSE 60950-1

Physical data	
Weight (including battery)	1.4 kg (3.1 lb.)
Size (L × W × H)	• Lens vertical: 150.5 × 201.3 × 84.1 mm (5.9 × 7.9 × 3.3 in.) • Lens horisontal: 150.5 × 201.3 × 167.3 mm (5.9 × 7.9 × 6.6 in.)
Battery weight	195 g (6.89 oz.)
Battery size (L × W × H)	59 × 66 × 94 mm (2.3 × 2.6 × 3.7 in.)
Tripod mounting	UNC ¼″-20
Housing material	PCABS with TPE, magnesium
Color	Black

Warranty and service	
Warranty	http://www.flir.com/warranty/

Shipping information	
Packaging, type	Cardboard box
Packaging, contents	• Accessory box I: ◦ Power supply for battery charger ◦ Power supply, 15 W/3 A ◦ Printed documentation ◦ SD card (8 GB) ◦ USB 2.0 A to USB Type-C cable ◦ USB Type-C to HDMI and PD adapter ◦ USB Type-C to USB Type-C cable (USB 2.0 standard) • Accessory box II: ◦ Lens cap strap ◦ Lens cleaning cloth ◦ Neck strap ◦ Small eyecup • Battery (2 ea) • Battery charger • Hard transport case • Infrared camera with lens • Lens cap, front • Lens cap, front and rear (only for extra lenses)
Packaging, size	500 × 190 × 370 mm (19.7 × 7.5 × 14.6 in.)
EAN-13	4743254004061
UPC-12	845188018894
Country of origin	Estonia

Supplies & accessories:

- T130337ACC; Calibration target
- T199588; Lens 14° + case
- T199589; Lens 24° + case
- T199590; Lens 42° + case
- T300095; Lens 6° with case
- T911630ACC; Power supply for camera, 15 W/3 A
- T911631ACC; USB 2.0 A to USB Type-C cable, 0.9 m
- T911633ACC; Power supply for battery charger
- T911705ACC; USB Type-C to USB Type-C cable (USB 2.0 standard), 1.0 m
- T911706ACC; Car adapter 12 V
- T911845ACC; USB Type-C to HDMI and PD adapter
- T911846ACC; USB 2.0 A to USB Type-C with Power supply
- T199300ACC; Battery
- T199610; Battery charger
- T199347ACC; Hard transport case
- T199609; Option, Macro mode 71/103 µm for 24°
- T300030; Option, No radio
- T198495; Pouch
- T197771ACC; Bluetooth Headset
- T198583; FLIR Tools+ (download card incl. license key)
- T198696; FLIR ResearchIR Max 4 (hardware sec. dev.)
- T199013; FLIR ResearchIR Max 4 (printed license key)
- T199043; FLIR ResearchIR Max 4 Upgrade (printed license key)

27.13 FLIR T840 24° + 14°

P/N: 82504-0201
Rev.: 55393

Imaging and optical data	
Infrared resolution	464 × 348 pixels
UltraMax (super-resolution)[15]	In FLIR Tools
NETD	• <40 mK, 24° @ +30°C (+86°F) • <50 mK, 14° @ +30°C (+86°F)
Field of view	• 24° × 18° • 14° × 10°
Minimum focus distance	• 0.15 m (0.49 ft.), 24° • 1.0 m (3.28 ft.), 14° • Macro mode 71 µm as option to 24°
Minimum focus distance with MSX	• 0.5 m (1.64 ft.), 24° • 1.0 m (3.28 ft.), 14°
Focal length	• 17 mm (0.67 in.), 24° • 29 mm (1.41 in.), 14°
Spatial resolution (IFOV)	• 0.90 mrad/pixel, 24° • 0.52 mrad/pixel, 14°
Available extra lenses	• 42° (AutoCal) • 6° (service calibration required)
Lens identification	Automatic
f number	• 1.3, 24° • 1.5, 14°
Image frequency	30 Hz
Focus	• Continuous LDM • One-shot LDM • One-shot contrast • Manual
Field of view match	Yes
Digital zoom	1–6× continuous

Detector data	
Focal plane array/spectral range	Uncooled microbolometer/7.5–14 µm
Detector pitch	17 µm

Image presentation	
Resolution (display)	640 × 480 pixels (VGA)
Surface brightness (cd/m^2)	400
Screen size	4 in.
Viewing angle	80°

15. Not supported when using macro.

Image presentation	
Color depth (bits)	24
Aspect ratio	4:3
Auto-rotation	Yes
Touchscreen	Optically bonded PCAP
Display technology	IPS
Cover glass material	Dragontrail®
Programmable buttons	2
Viewfinder	Yes
Image adjustment	• Automatic • Automatic maximum • Automatic minimum • Manual

Image presentation modes	
Infrared image	Yes
Visual image	Yes
MSX	Yes
Picture in picture	Resizable and movable
Gallery	Yes

Measurement		
Camera temperature range	Object temperature range	Accuracy — for ambient temperature +15 to +35°C (+59 to +95°F)
–20 to +120°C (–4 to +248°F)	–20 to +100°C (–4 to +212°F)	±2°C (±3.6°F)
	+100 to +120°C (+212 to +248°F)	±2%
0 to +650°C (+32 to +1202°F)	0 to +100°C (+32 to +212°F)	±2°C (±3.6°F)
	+100 to + 650°C (+212 to +1202°F)	±2%
+300 to +1500°C (+572 to +2732°F)	+300 to +1500°C (+572 to +2732°F)	±2%

Measurement analysis	
Spotmeter	3 in live mode
Area	3 in live mode
Automatic hot/cold detection	Automatic maximum/minimum markers within area
Measurement presets	• No measurements • Center spot • Hot spot • Cold spot • User preset 1 • User preset 2
Difference temperature	Yes
Reference temperature	Yes
Emissivity correction	Yes, variable from 0.01 to 1.0 or selected from materials list

Measurement analysis	
Measurement corrections	Yes
External optics/windows correction	Yes
Screening	0.5°C (0.9°F) accuracy at 37°C (98.6°F) with reference

Alarm	
Color alarm (isotherm)	• Above • Below • Interval • Condensation (moisture/humidity/dewpoint) • Insulation
Measurement function alarm	Audible/visual alarms (above/below) on any selected measurement function

Set-up	
Color palettes	• Iron • Gray • Rainbow • Arctic • Lava • Rainbow HC
Setup commands	Local adaptation of units, language, date, and time formats
Languages	21

Service functions	
Camera software update	Use PC software FLIR Tools

Storage of images	
Storage media	Removable memory: SD card
Time lapse (Periodic image storage)	10 seconds to 24 hours (infrared)
Remote control operation	• Using FLIR Tools (using USB cable) • FLIR Tools Mobile (over Wi-Fi)
Image file format	Standard JPEG, measurement data included. Infrared-only mode.

Image annotations	
Voice	60 seconds with built-in microphone and speaker (and via Bluetooth) on still images and video
Text	Text from predefined list or soft keyboard on touchscreen
Visual image annotation	Yes
Image sketch	Yes: on infrared only
Sketch	From touchscreen
METERLiNK	Wireless connection (Bluetooth) to: FLIR meters with METERLiNK
Laser distance meter information	Yes
Area measurement information	Yes
GPS	Location data automatically added to every still image and first frame in video from built-in GPS

Video recording in camera	
Radiometric infrared-video recording	RTRR (.csq)
Non-radiometric infrared-video recording	H.264 to memory card
Visual video recording	H.264 to memory card

Video streaming	
Radiometric infrared-video streaming (compressed)	Over UVC
Non-radiometric video streaming (compressed: IR, MSX, visual, Picture in Picture)	• H.264 (AVC) over RTSP (Wi-Fi) • MPEG4 over RTSP (Wi-Fi) • MJPEG over UVC and RTSP (Wi-Fi)
Visual video streaming	Yes

Digital camera	
Resolution	5 MP with LED light
Focus	Fixed
Field of view	53° × 41°
Video lamp	Built-in LED light

Laser pointer	
Laser alignment	Position is automatically displayed on the infrared image
Laser distance meter	Activated by dedicated button
Laser	Class 2, 0.05–40 m (0.16–131 ft.) ±1% of measured distance

Data communication interfaces	
Interfaces	USB 2.0, Bluetooth, Wi-Fi, DisplayPort
METERLiNK/Bluetooth	Communication with headset and external sensors
Wi-Fi	Peer to peer (ad hoc) or infrastructure (network)
Audio	Microphone and speaker for voice annotation of images
USB	USB Type-C: data transfer/video/power
USB standard	USB 2.0 High Speed
Video out	DisplayPort
Video connector type	DisplayPort over USB Type-C

Radio	
Operating frequency	Bluetooth + EDR/LE: 2402–2480 MHz WLAN 2.4 GHz: 2412–2462 MHz WLAN 5 GHz: 5150–5350 MHz (DFS: only slave mode) Note that frequency band 5150–5350 MHz is for indoor use only, see national regulations.
RF output (EIRP)	Bluetooth + EDR/LE: < 10 dBm WLAN: < 17 dBm
Antenna	Integrated PIFA antenna (gain: maximum 1.4 dBi)

Power system	
Battery type	Rechargeable Li-ion battery
Battery voltage	3.6 V
Battery operating time	> 4 hours at 25°C (68°F) with typical use
Charging system	In camera (AC adapter or 12 V from a vehicle) or two-bay charger
Charging time (using two-bay charger)	3.5 h to 90% capacity, on-screen indicator
Charging temperature	0°C to +45°C (+32°F to +113°F), except for the Korean market: +10°C to +45°C (+50°F to +113°F)
External power operation	AC adapter 90–260 V AC (50/60 Hz) or 12 V from a vehicle (cable with standard plug, optional)
Power management	Automatic shut-down and sleep mode

Environmental data	
Operating temperature range	–15 to +50°C (5–122°F)
Storage temperature range	–40 to +70°C (–40 to 158°F)
Humidity (operating and storage)	IEC 60068-2-30/24 hours, 95% relative humidity, 25–40°C (77–104°F)/2 cycles
EMC	• ETSI EN 301 489-1 (radio) • ETSI EN 301 489-17 • EN 61000-6-2 (immunity) • EN 61000-6-3 (emission) • FCC 47 CFR Part 15 Class B (emission)
Radio spectrum	• ETSI EN 300 228 • FCC Part 15.249 • RSS-247 Issue 2
Encapsulation	IP 54 (IEC 60529)
Shock	25g (IEC 60068-2-27)
Vibration	2g (IEC 60068-2-6)
Safety	EN/UL/CSA/PSE 60950-1

Physical data	
Weight (including battery)	1.4 kg (3.1 lb.)
Size (L × W × H)	• Lens vertical: 150.5 × 201.3 × 84.1 mm (5.9 × 7.9 × 3.3 in.) • Lens horisontal: 150.5 × 201.3 × 167.3 mm (5.9 × 7.9 × 6.6 in.)
Battery weight	195 g (6.89 oz.)
Battery size (L × W × H)	59 × 66 × 94 mm (2.3 × 2.6 × 3.7 in.)
Tripod mounting	UNC ¼″-20
Housing material	PCABS with TPE, magnesium
Color	Black

Warranty and service	
Warranty	http://www.flir.com/warranty/

Shipping information	
Packaging, type	Cardboard box
Packaging, contents	• Accessory box I: ◦ Power supply for battery charger ◦ Power supply, 15 W/3 A ◦ Printed documentation ◦ SD card (8 GB) ◦ USB 2.0 A to USB Type-C cable ◦ USB Type-C to HDMI and PD adapter ◦ USB Type-C to USB Type-C cable (USB 2.0 standard) • Accessory box II: ◦ Lens cap strap ◦ Lens cleaning cloth ◦ Neck strap ◦ Small eyecup • Battery (2 ea) • Battery charger • Extra lens, 14° • Hard transport case • Infrared camera with lens • Lens cap, front • Lens cap, front and rear (only for extra lenses)
Packaging, size	500 × 190 × 370 mm (19.7 × 7.5 × 14.6 in.)
EAN-13	4743254004160
UPC-12	845188018993
Country of origin	Estonia

Supplies & accessories:

- T130337ACC; Calibration target
- T199588; Lens 14° + case
- T199589; Lens 24° + case
- T199590; Lens 42° + case
- T300095; Lens 6° with case
- T911630ACC; Power supply for camera, 15 W/3 A
- T911631ACC; USB 2.0 A to USB Type-C cable, 0.9 m
- T911633ACC; Power supply for battery charger
- T911705ACC; USB Type-C to USB Type-C cable (USB 2.0 standard), 1.0 m
- T911706ACC; Car adapter 12 V
- T911845ACC; USB Type-C to HDMI and PD adapter
- T911846ACC; USB 2.0 A to USB Type-C with Power supply
- T199300ACC; Battery
- T199610; Battery charger
- T199347ACC; Hard transport case
- T199609; Option, Macro mode 71/103 µm for 24°
- T300030; Option, No radio
- T198495; Pouch
- T197771ACC; Bluetooth Headset
- T198583; FLIR Tools+ (download card incl. license key)
- T198696; FLIR ResearchIR Max 4 (hardware sec. dev.)
- T199013; FLIR ResearchIR Max 4 (printed license key)
- T199043; FLIR ResearchIR Max 4 Upgrade (printed license key)

27.14 FLIR T840 24° + 14° & 42°

P/N: 82506-0201
Rev.: 55391

Imaging and optical data	
Infrared resolution	464 × 348 pixels
UltraMax (super-resolution)[16]	In FLIR Tools
NETD	• <30 mK, 42° @ +30°C (+86°F) • <40 mK, 24° @ +30°C (+86°F) • <50 mK, 14° @ +30°C (+86°F)
Field of view	• 42° × 32° • 24° × 18° • 14° × 10°
Minimum focus distance	• 0.15 m (0.49 ft.), 42° • 0.15 m (0.49 ft.), 24° • 1.0 m (3.28 ft.), 14° • Macro mode 71 µm as option to 24°
Minimum focus distance with MSX	• 0.65 m (2.13 ft.), 42° • 0.5 m (1.64 ft.), 24° • 1.0 m (3.28 ft.), 14°
Focal length	• 10 mm (0.39 in.), 42° • 17 mm (0.67 in.), 24° • 29 mm (1.41 in.), 14°
Spatial resolution (IFOV)	• 1.66 mrad/pixel, 42° • 0.90 mrad/pixel, 24° • 0.52 mrad/pixel, 14°
Available extra lenses	• 6° (service calibration required)
Lens identification	Automatic
f number	• 1.1, 42° • 1.3, 24° • 1.5, 14°
Image frequency	30 Hz
Focus	• Continuous LDM • One-shot LDM • One-shot contrast • Manual
Field of view match	Yes
Digital zoom	1–6× continuous

Detector data	
Focal plane array/spectral range	Uncooled microbolometer/7.5–14 µm
Detector pitch	17 µm

16. Not supported when using macro.

Image presentation	
Resolution (display)	640 × 480 pixels (VGA)
Surface brightness (cd/m²)	400
Screen size	4 in.
Viewing angle	80°
Color depth (bits)	24
Aspect ratio	4:3
Auto-rotation	Yes
Touchscreen	Optically bonded PCAP
Display technology	IPS
Cover glass material	Dragontrail®
Programmable buttons	2
Viewfinder	Yes
Image adjustment	• Automatic • Automatic maximum • Automatic minimum • Manual

Image presentation modes	
Infrared image	Yes
Visual image	Yes
MSX	Yes
Picture in picture	Resizable and movable
Gallery	Yes

Measurement		
Camera temperature range	Object temperature range	Accuracy — for ambient temperature +15 to +35°C (+59 to +95° F)
–20 to +120°C (–4 to +248°F)	–20 to +100°C (–4 to +212°F)	±2°C (±3.6°F)
	+100 to +120°C (+212 to +248° F)	±2%
0 to +650°C (+32 to +1202°F)	0 to +100°C (+32 to +212°F)	±2°C (±3.6°F)
	+100 to + 650°C (+212 to +1202°F)	±2%
+300 to +1500°C (+572 to +2732°F)	+300 to +1500°C (+572 to +2732°F)	±2%

Measurement analysis	
Spotmeter	3 in live mode
Area	3 in live mode
Automatic hot/cold detection	Automatic maximum/minimum markers within area
Measurement presets	• No measurements • Center spot • Hot spot • Cold spot • User preset 1 • User preset 2

Measurement analysis	
Difference temperature	Yes
Reference temperature	Yes
Emissivity correction	Yes, variable from 0.01 to 1.0 or selected from materials list
Measurement corrections	Yes
External optics/windows correction	Yes
Screening	0.5°C (0.9°F) accuracy at 37°C (98.6°F) with reference

Alarm	
Color alarm (isotherm)	• Above • Below • Interval • Condensation (moisture/humidity/dewpoint) • Insulation
Measurement function alarm	Audible/visual alarms (above/below) on any selected measurement function

Set-up	
Color palettes	• Iron • Gray • Rainbow • Arctic • Lava • Rainbow HC
Setup commands	Local adaptation of units, language, date, and time formats
Languages	21

Service functions	
Camera software update	Use PC software FLIR Tools

Storage of images	
Storage media	Removable memory: SD card
Time lapse (Periodic image storage)	10 seconds to 24 hours (infrared)
Remote control operation	• Using FLIR Tools (using USB cable) • FLIR Tools Mobile (over Wi-Fi)
Image file format	Standard JPEG, measurement data included. Infrared-only mode.

Image annotations	
Voice	60 seconds with built-in microphone and speaker (and via Bluetooth) on still images and video
Text	Text from predefined list or soft keyboard on touchscreen
Visual image annotation	Yes
Image sketch	Yes: on infrared only
Sketch	From touchscreen
METERLiNK	Wireless connection (Bluetooth) to: FLIR meters with METERLiNK

Image annotations	
Laser distance meter information	Yes
Area measurement information	Yes
GPS	Location data automatically added to every still image and first frame in video from built-in GPS

Video recording in camera	
Radiometric infrared-video recording	RTRR (.csq)
Non-radiometric infrared-video recording	H.264 to memory card
Visual video recording	H.264 to memory card

Video streaming	
Radiometric infrared-video streaming (compressed)	Over UVC
Non-radiometric video streaming (compressed: IR, MSX, visual, Picture in Picture)	• H.264 (AVC) over RTSP (Wi-Fi) • MPEG4 over RTSP (Wi-Fi) • MJPEG over UVC and RTSP (Wi-Fi)
Visual video streaming	Yes

Digital camera	
Resolution	5 MP with LED light
Focus	Fixed
Field of view	53° × 41°
Video lamp	Built-in LED light

Laser pointer	
Laser alignment	Position is automatically displayed on the infrared image
Laser distance meter	Activated by dedicated button
Laser	Class 2, 0.05–40 m (0.16–131 ft.) ±1% of measured distance

Data communication interfaces	
Interfaces	USB 2.0, Bluetooth, Wi-Fi, DisplayPort
METERLiNK/Bluetooth	Communication with headset and external sensors
Wi-Fi	Peer to peer (ad hoc) or infrastructure (network)
Audio	Microphone and speaker for voice annotation of images
USB	USB Type-C: data transfer/video/power
USB standard	USB 2.0 High Speed
Video out	DisplayPort
Video connector type	DisplayPort over USB Type-C

Radio	
Operating frequency	Bluetooth + EDR/LE: 2402–2480 MHz WLAN 2.4 GHz: 2412–2462 MHz WLAN 5 GHz: 5150–5350 MHz (DFS: only slave mode) Note that frequency band 5150–5350 MHz is for indoor use only, see national regulations.
RF output (EIRP)	Bluetooth + EDR/LE: < 10 dBm WLAN: < 17 dBm
Antenna	Integrated PIFA antenna (gain: maximum 1.4 dBi)

Power system	
Battery type	Rechargeable Li-ion battery
Battery voltage	3.6 V
Battery operating time	> 4 hours at 25°C (68°F) with typical use
Charging system	In camera (AC adapter or 12 V from a vehicle) or two-bay charger
Charging time (using two-bay charger)	3.5 h to 90% capacity, on-screen indicator
Charging temperature	0°C to +45°C (+32°F to +113°F), except for the Korean market: +10°C to +45°C (+50°F to +113°F)
External power operation	AC adapter 90–260 V AC (50/60 Hz) or 12 V from a vehicle (cable with standard plug, optional)
Power management	Automatic shut-down and sleep mode

Environmental data	
Operating temperature range	–15 to +50°C (5–122°F)
Storage temperature range	–40 to +70°C (–40 to 158°F)
Humidity (operating and storage)	IEC 60068-2-30/24 hours, 95% relative humidity, 25–40°C (77–104°F)/2 cycles
EMC	• ETSI EN 301 489-1 (radio) • ETSI EN 301 489-17 • EN 61000-6-2 (immunity) • EN 61000-6-3 (emission) • FCC 47 CFR Part 15 Class B (emission)
Radio spectrum	• ETSI EN 300 228 • FCC Part 15.249 • RSS-247 Issue 2
Encapsulation	IP 54 (IEC 60529)
Shock	25g (IEC 60068-2-27)
Vibration	2g (IEC 60068-2-6)
Safety	EN/UL/CSA/PSE 60950-1

Physical data	
Weight (including battery)	1.4 kg (3.1 lb.)
Size (L × W × H)	• Lens vertical: 150.5 × 201.3 × 84.1 mm (5.9 × 7.9 × 3.3 in.) • Lens horisontal: 150.5 × 201.3 × 167.3 mm (5.9 × 7.9 × 6.6 in.)

Physical data	
Battery weight	195 g (6.89 oz.)
Battery size (L × W × H)	59 × 66 × 94 mm (2.3 × 2.6 × 3.7 in.)
Tripod mounting	UNC ¼″-20
Housing material	PCABS with TPE, magnesium
Color	Black

Warranty and service	
Warranty	http://www.flir.com/warranty/

Shipping information	
Packaging, type	Cardboard box
Packaging, contents	• Accessory box I: ◦ Power supply for battery charger ◦ Power supply, 15 W/3 A ◦ Printed documentation ◦ SD card (8 GB) ◦ USB 2.0 A to USB Type-C cable ◦ USB Type-C to HDMI and PD adapter ◦ USB Type-C to USB Type-C cable (USB 2.0 standard) • Accessory box II: ◦ Lens cap strap ◦ Lens cleaning cloth ◦ Neck strap ◦ Small eyecup • Battery (2 ea) • Battery charger • Extra lens, 14° • Extra lens, 42° • Hard transport case • Infrared camera with lens • Lens cap, front • Lens cap, front and rear (only for extra lenses)
Packaging, size	500 × 190 × 370 mm (19.7 × 7.5 × 14.6 in.)
EAN-13	4743254004078
UPC-12	845188018900
Country of origin	Estonia

Supplies & accessories:

- T130337ACC; Calibration target
- T199588; Lens 14° + case
- T199589; Lens 24° + case
- T199590; Lens 42° + case
- T300095; Lens 6° with case
- T911630ACC; Power supply for camera, 15 W/3 A
- T911631ACC; USB 2.0 A to USB Type-C cable, 0.9 m
- T911633ACC; Power supply for battery charger
- T911705ACC; USB Type-C to USB Type-C cable (USB 2.0 standard), 1.0 m
- T911706ACC; Car adapter 12 V
- T911845ACC; USB Type-C to HDMI and PD adapter
- T911846ACC; USB 2.0 A to USB Type-C with Power supply
- T199300ACC; Battery

- T199610; Battery charger
- T199347ACC; Hard transport case
- T199609; Option, Macro mode 71/103 µm for 24°
- T300030; Option, No radio
- T198495; Pouch
- T197771ACC; Bluetooth Headset
- T198583; FLIR Tools+ (download card incl. license key)
- T198696; FLIR ResearchIR Max 4 (hardware sec. dev.)
- T199013; FLIR ResearchIR Max 4 (printed license key)
- T199043; FLIR ResearchIR Max 4 Upgrade (printed license key)

27.15 FLIR T840 24° + 42°

P/N: 82505-0201
Rev.: 55392

Imaging and optical data	
Infrared resolution	464 × 348 pixels
UltraMax (super-resolution)[17]	In FLIR Tools
NETD	• <30 mK, 42° @ +30°C (+86°F) • <40 mK, 24° @ +30°C (+86°F)
Field of view	• 42° × 32° • 24° × 18°
Minimum focus distance	• 0.15 m (0.49 ft.), 42° • 0.15 m (0.49 ft.), 24° • Macro mode 71 µm as option to 24°
Minimum focus distance with MSX	• 0.65 m (2.13 ft.), 42° • 0.5 m (1.64 ft.), 24°
Focal length	• 10 mm (0.39 in.), 42° • 17 mm (0.67 in.), 24°
Spatial resolution (IFOV)	• 1.66 mrad/pixel, 42° • 0.90 mrad/pixel, 24°
Available extra lenses	• 14° (AutoCal) • 6° (service calibration required)
Lens identification	Automatic
f number	• 1.1, 42° • 1.3, 24°
Image frequency	30 Hz
Focus	• Continuous LDM • One-shot LDM • One-shot contrast • Manual
Field of view match	Yes
Digital zoom	1–6× continuous

Detector data	
Focal plane array/spectral range	Uncooled microbolometer/7.5–14 µm
Detector pitch	17 µm

Image presentation	
Resolution (display)	640 × 480 pixels (VGA)
Surface brightness (cd/m^2)	400
Screen size	4 in.
Viewing angle	80°

17. Not supported when using macro.

Image presentation	
Color depth (bits)	24
Aspect ratio	4:3
Auto-rotation	Yes
Touchscreen	Optically bonded PCAP
Display technology	IPS
Cover glass material	Dragontrail®
Programmable buttons	2
Viewfinder	Yes
Image adjustment	• Automatic • Automatic maximum • Automatic minimum • Manual

Image presentation modes	
Infrared image	Yes
Visual image	Yes
MSX	Yes
Picture in picture	Resizable and movable
Gallery	Yes

Measurement		
Camera temperature range	Object temperature range	Accuracy — for ambient temperature +15 to +35°C (+59 to +95°F)
–20 to +120°C (–4 to +248°F)	–20 to +100°C (–4 to +212°F)	±2°C (±3.6°F)
	+100 to +120°C (+212 to +248°F)	±2%
0 to +650°C (+32 to +1202°F)	0 to +100°C (+32 to +212°F)	±2°C (±3.6°F)
	+100 to + 650°C (+212 to +1202°F)	±2%
+300 to +1500°C (+572 to +2732°F)	+300 to +1500°C (+572 to +2732°F)	±2%

Measurement analysis	
Spotmeter	3 in live mode
Area	3 in live mode
Automatic hot/cold detection	Automatic maximum/minimum markers within area
Measurement presets	• No measurements • Center spot • Hot spot • Cold spot • User preset 1 • User preset 2
Difference temperature	Yes
Reference temperature	Yes
Emissivity correction	Yes, variable from 0.01 to 1.0 or selected from materials list

Measurement analysis	
Measurement corrections	Yes
External optics/windows correction	Yes
Screening	0.5°C (0.9°F) accuracy at 37°C (98.6°F) with reference

Alarm	
Color alarm (isotherm)	• Above • Below • Interval • Condensation (moisture/humidity/dewpoint) • Insulation
Measurement function alarm	Audible/visual alarms (above/below) on any selected measurement function

Set-up	
Color palettes	• Iron • Gray • Rainbow • Arctic • Lava • Rainbow HC
Setup commands	Local adaptation of units, language, date, and time formats
Languages	21

Service functions	
Camera software update	Use PC software FLIR Tools

Storage of images	
Storage media	Removable memory: SD card
Time lapse (Periodic image storage)	10 seconds to 24 hours (infrared)
Remote control operation	• Using FLIR Tools (using USB cable) • FLIR Tools Mobile (over Wi-Fi)
Image file format	Standard JPEG, measurement data included. Infrared-only mode.

Image annotations	
Voice	60 seconds with built-in microphone and speaker (and via Bluetooth) on still images and video
Text	Text from predefined list or soft keyboard on touchscreen
Visual image annotation	Yes
Image sketch	Yes: on infrared only
Sketch	From touchscreen
METERLiNK	Wireless connection (Bluetooth) to: FLIR meters with METERLiNK
Laser distance meter information	Yes
Area measurement information	Yes
GPS	Location data automatically added to every still image and first frame in video from built-in GPS

Video recording in camera	
Radiometric infrared-video recording	RTRR (.csq)
Non-radiometric infrared-video recording	H.264 to memory card
Visual video recording	H.264 to memory card

Video streaming	
Radiometric infrared-video streaming (compressed)	Over UVC
Non-radiometric video streaming (compressed: IR, MSX, visual, Picture in Picture)	• H.264 (AVC) over RTSP (Wi-Fi) • MPEG4 over RTSP (Wi-Fi) • MJPEG over UVC and RTSP (Wi-Fi)
Visual video streaming	Yes

Digital camera	
Resolution	5 MP with LED light
Focus	Fixed
Field of view	53° × 41°
Video lamp	Built-in LED light

Laser pointer	
Laser alignment	Position is automatically displayed on the infrared image
Laser distance meter	Activated by dedicated button
Laser	Class 2, 0.05–40 m (0.16–131 ft.) ±1% of measured distance

Data communication interfaces	
Interfaces	USB 2.0, Bluetooth, Wi-Fi, DisplayPort
METERLiNK/Bluetooth	Communication with headset and external sensors
Wi-Fi	Peer to peer (ad hoc) or infrastructure (network)
Audio	Microphone and speaker for voice annotation of images
USB	USB Type-C: data transfer/video/power
USB standard	USB 2.0 High Speed
Video out	DisplayPort
Video connector type	DisplayPort over USB Type-C

Radio	
Operating frequency	Bluetooth + EDR/LE: 2402–2480 MHz WLAN 2.4 GHz: 2412–2462 MHz WLAN 5 GHz: 5150–5350 MHz (DFS: only slave mode) Note that frequency band 5150–5350 MHz is for indoor use only, see national regulations.
RF output (EIRP)	Bluetooth + EDR/LE: < 10 dBm WLAN: < 17 dBm
Antenna	Integrated PIFA antenna (gain: maximum 1.4 dBi)

Power system	
Battery type	Rechargeable Li-ion battery
Battery voltage	3.6 V
Battery operating time	> 4 hours at 25°C (68°F) with typical use
Charging system	In camera (AC adapter or 12 V from a vehicle) or two-bay charger
Charging time (using two-bay charger)	3.5 h to 90% capacity, on-screen indicator
Charging temperature	0°C to +45°C (+32°F to +113°F), except for the Korean market: +10°C to +45°C (+50°F to +113°F)
External power operation	AC adapter 90–260 V AC (50/60 Hz) or 12 V from a vehicle (cable with standard plug, optional)
Power management	Automatic shut-down and sleep mode

Environmental data	
Operating temperature range	–15 to +50°C (5–122°F)
Storage temperature range	–40 to +70°C (–40 to 158°F)
Humidity (operating and storage)	IEC 60068-2-30/24 hours, 95% relative humidity, 25–40°C (77–104°F)/2 cycles
EMC	• ETSI EN 301 489-1 (radio) • ETSI EN 301 489-17 • EN 61000-6-2 (immunity) • EN 61000-6-3 (emission) • FCC 47 CFR Part 15 Class B (emission)
Radio spectrum	• ETSI EN 300 228 • FCC Part 15.249 • RSS-247 Issue 2
Encapsulation	IP 54 (IEC 60529)
Shock	25g (IEC 60068-2-27)
Vibration	2g (IEC 60068-2-6)
Safety	EN/UL/CSA/PSE 60950-1

Physical data	
Weight (including battery)	1.4 kg (3.1 lb.)
Size (L × W × H)	• Lens vertical: 150.5 × 201.3 × 84.1 mm (5.9 × 7.9 × 3.3 in.) • Lens horisontal: 150.5 × 201.3 × 167.3 mm (5.9 × 7.9 × 6.6 in.)
Battery weight	195 g (6.89 oz.)
Battery size (L × W × H)	59 × 66 × 94 mm (2.3 × 2.6 × 3.7 in.)
Tripod mounting	UNC ¼″-20
Housing material	PCABS with TPE, magnesium
Color	Black

Warranty and service	
Warranty	http://www.flir.com/warranty/

Shipping information	
Packaging, type	Cardboard box
Packaging, contents	• Accessory box I: ◦ Power supply for battery charger ◦ Power supply, 15 W/3 A ◦ Printed documentation ◦ SD card (8 GB) ◦ USB 2.0 A to USB Type-C cable ◦ USB Type-C to HDMI and PD adapter ◦ USB Type-C to USB Type-C cable (USB 2.0 standard) • Accessory box II: ◦ Lens cap strap ◦ Lens cleaning cloth ◦ Neck strap ◦ Small eyecup • Battery (2 ea) • Battery charger • Extra lens, 42° • Hard transport case • Infrared camera with lens • Lens cap, front • Lens cap, front and rear (only for extra lenses)
Packaging, size	500 × 190 × 370 mm (19.7 × 7.5 × 14.6 in.)
EAN-13	4743254004177
UPC-12	845188019006
Country of origin	Estonia

Supplies & accessories:

- T130337ACC; Calibration target
- T199588; Lens 14° + case
- T199589; Lens 24° + case
- T199590; Lens 42° + case
- T300095; Lens 6° with case
- T911630ACC; Power supply for camera, 15 W/3 A
- T911631ACC; USB 2.0 A to USB Type-C cable, 0.9 m
- T911633ACC; Power supply for battery charger
- T911705ACC; USB Type-C to USB Type-C cable (USB 2.0 standard), 1.0 m
- T911706ACC; Car adapter 12 V
- T911845ACC; USB Type-C to HDMI and PD adapter
- T911846ACC; USB 2.0 A to USB Type-C with Power supply
- T199300ACC; Battery
- T199610; Battery charger
- T199347ACC; Hard transport case
- T199609; Option, Macro mode 71/103 µm for 24°
- T300030; Option, No radio
- T198495; Pouch
- T197771ACC; Bluetooth Headset
- T198583; FLIR Tools+ (download card incl. license key)
- T198696; FLIR ResearchIR Max 4 (hardware sec. dev.)
- T199013; FLIR ResearchIR Max 4 (printed license key)
- T199043; FLIR ResearchIR Max 4 Upgrade (printed license key)

27.16 FLIR T840 42°

P/N: 82503-0201
Rev.: 55394

Imaging and optical data	
Infrared resolution	464 × 348 pixels
UltraMax (super-resolution)[18]	In FLIR Tools
NETD	<30 mK @ +30°C (+86°F)
Field of view	42° × 32°
Minimum focus distance	0.15 m (0.49 ft.)
Minimum focus distance with MSX	0.65 m (2.13 ft.)
Focal length	10 mm (0.39 in.)
Spatial resolution (IFOV)	1.66 mrad/pixel
Available extra lenses	• 24° (AutoCal) • 14° (AutoCal) • 6° (service calibration required)
Lens identification	Automatic
f number	1.1
Image frequency	30 Hz
Focus	• Continuous LDM • One-shot LDM • One-shot contrast • Manual
Field of view match	Yes
Digital zoom	1–6× continuous

Detector data	
Focal plane array/spectral range	Uncooled microbolometer/7.5–14 µm
Detector pitch	17 µm

Image presentation	
Resolution (display)	640 × 480 pixels (VGA)
Surface brightness (cd/m^2)	400
Screen size	4 in.
Viewing angle	80°
Color depth (bits)	24
Aspect ratio	4:3
Auto-rotation	Yes
Touchscreen	Optically bonded PCAP
Display technology	IPS
Cover glass material	Dragontrail®
Programmable buttons	2

18. Not supported when using macro.

Image presentation	
Viewfinder	Yes
Image adjustment	• Automatic • Automatic maximum • Automatic minimum • Manual

Image presentation modes	
Infrared image	Yes
Visual image	Yes
MSX	Yes
Picture in picture	Resizable and movable
Gallery	Yes

Measurement		
Camera temperature range	Object temperature range	Accuracy — for ambient temperature +15 to +35°C (+59 to +95° F)
–20 to +120°C (–4 to +248°F)	–20 to +100°C (–4 to +212°F)	±2°C (±3.6°F)
	+100 to +120°C (+212 to +248° F)	±2%
0 to +650°C (+32 to +1202°F)	0 to +100°C (+32 to +212°F)	±2°C (±3.6°F)
	+100 to + 650°C (+212 to +1202°F)	±2%
+300 to +1500°C (+572 to +2732°F)	+300 to +1500°C (+572 to +2732°F)	±2%

Measurement analysis	
Spotmeter	3 in live mode
Area	3 in live mode
Automatic hot/cold detection	Automatic maximum/minimum markers within area
Measurement presets	• No measurements • Center spot • Hot spot • Cold spot • User preset 1 • User preset 2
Difference temperature	Yes
Reference temperature	Yes
Emissivity correction	Yes, variable from 0.01 to 1.0 or selected from materials list
Measurement corrections	Yes
External optics/windows correction	Yes
Screening	0.5°C (0.9°F) accuracy at 37°C (98.6°F) with reference

Alarm	
Color alarm (isotherm)	• Above • Below • Interval • Condensation (moisture/humidity/dewpoint) • Insulation
Measurement function alarm	Audible/visual alarms (above/below) on any selected measurement function

Set-up	
Color palettes	• Iron • Gray • Rainbow • Arctic • Lava • Rainbow HC
Setup commands	Local adaptation of units, language, date, and time formats
Languages	21

Service functions	
Camera software update	Use PC software FLIR Tools

Storage of images	
Storage media	Removable memory: SD card
Time lapse (Periodic image storage)	10 seconds to 24 hours (infrared)
Remote control operation	• Using FLIR Tools (using USB cable) • FLIR Tools Mobile (over Wi-Fi)
Image file format	Standard JPEG, measurement data included. Infrared-only mode.

Image annotations	
Voice	60 seconds with built-in microphone and speaker (and via Bluetooth) on still images and video
Text	Text from predefined list or soft keyboard on touchscreen
Visual image annotation	Yes
Image sketch	Yes: on infrared only
Sketch	From touchscreen
METERLiNK	Wireless connection (Bluetooth) to: FLIR meters with METERLiNK
Laser distance meter information	Yes
Area measurement information	Yes
GPS	Location data automatically added to every still image and first frame in video from built-in GPS

Video recording in camera	
Radiometric infrared-video recording	RTRR (.csq)
Non-radiometric infrared-video recording	H.264 to memory card
Visual video recording	H.264 to memory card

Video streaming	
Radiometric infrared-video streaming (compressed)	Over UVC
Non-radiometric video streaming (compressed: IR, MSX, visual, Picture in Picture)	• H.264 (AVC) over RTSP (Wi-Fi) • MPEG4 over RTSP (Wi-Fi) • MJPEG over UVC and RTSP (Wi-Fi)
Visual video streaming	Yes

Digital camera	
Resolution	5 MP with LED light
Focus	Fixed
Field of view	53° × 41°
Video lamp	Built-in LED light

Laser pointer	
Laser alignment	Position is automatically displayed on the infrared image
Laser distance meter	Activated by dedicated button
Laser	Class 2, 0.05–40 m (0.16–131 ft.) ±1% of measured distance

Data communication interfaces	
Interfaces	USB 2.0, Bluetooth, Wi-Fi, DisplayPort
METERLiNK/Bluetooth	Communication with headset and external sensors
Wi-Fi	Peer to peer (ad hoc) or infrastructure (network)
Audio	Microphone and speaker for voice annotation of images
USB	USB Type-C: data transfer/video/power
USB standard	USB 2.0 High Speed
Video out	DisplayPort
Video connector type	DisplayPort over USB Type-C

Radio	
Operating frequency	Bluetooth + EDR/LE: 2402–2480 MHz WLAN 2.4 GHz: 2412–2462 MHz WLAN 5 GHz: 5150–5350 MHz (DFS: only slave mode) Note that frequency band 5150–5350 MHz is for indoor use only, see national regulations.
RF output (EIRP)	Bluetooth + EDR/LE: < 10 dBm WLAN: < 17 dBm
Antenna	Integrated PIFA antenna (gain: maximum 1.4 dBi)

Power system	
Battery type	Rechargeable Li-ion battery
Battery voltage	3.6 V
Battery operating time	> 4 hours at 25°C (68°F) with typical use

Power system	
Charging system	In camera (AC adapter or 12 V from a vehicle) or two-bay charger
Charging time (using two-bay charger)	3.5 h to 90% capacity, on-screen indicator
Charging temperature	0°C to +45°C (+32°F to +113°F), except for the Korean market: +10°C to +45°C (+50°F to +113°F)
External power operation	AC adapter 90–260 V AC (50/60 Hz) or 12 V from a vehicle (cable with standard plug, optional)
Power management	Automatic shut-down and sleep mode

Environmental data	
Operating temperature range	–15 to +50°C (5–122°F)
Storage temperature range	–40 to +70°C (–40 to 158°F)
Humidity (operating and storage)	IEC 60068-2-30/24 hours, 95% relative humidity, 25–40°C (77–104°F)/2 cycles
EMC	• ETSI EN 301 489-1 (radio) • ETSI EN 301 489-17 • EN 61000-6-2 (immunity) • EN 61000-6-3 (emission) • FCC 47 CFR Part 15 Class B (emission)
Radio spectrum	• ETSI EN 300 228 • FCC Part 15.249 • RSS-247 Issue 2
Encapsulation	IP 54 (IEC 60529)
Shock	25g (IEC 60068-2-27)
Vibration	2g (IEC 60068-2-6)
Safety	EN/UL/CSA/PSE 60950-1

Physical data	
Weight (including battery)	1.4 kg (3.1 lb.)
Size (L × W × H)	• Lens vertical: 150.5 × 201.3 × 84.1 mm (5.9 × 7.9 × 3.3 in.) • Lens horisontal: 150.5 × 201.3 × 167.3 mm (5.9 × 7.9 × 6.6 in.)
Battery weight	195 g (6.89 oz.)
Battery size (L × W × H)	59 × 66 × 94 mm (2.3 × 2.6 × 3.7 in.)
Tripod mounting	UNC ¼″-20
Housing material	PCABS with TPE, magnesium
Color	Black

Warranty and service	
Warranty	http://www.flir.com/warranty/

Shipping information	
Packaging, type	Cardboard box
Packaging, contents	• Accessory box I: ◦ Power supply for battery charger ◦ Power supply, 15 W/3 A ◦ Printed documentation ◦ SD card (8 GB) ◦ USB 2.0 A to USB Type-C cable ◦ USB Type-C to HDMI and PD adapter ◦ USB Type-C to USB Type-C cable (USB 2.0 standard) • Accessory box II: ◦ Lens cap strap ◦ Lens cleaning cloth ◦ Neck strap ◦ Small eyecup • Battery (2 ea) • Battery charger • Hard transport case • Infrared camera with lens • Lens cap, front • Lens cap, front and rear (only for extra lenses)
Packaging, size	500 × 190 × 370 mm (19.7 × 7.5 × 14.6 in.)
EAN-13	4743254004184
UPC-12	845188019013
Country of origin	Estonia

Supplies & accessories:

- T130337ACC; Calibration target
- T199588; Lens 14° + case
- T199589; Lens 24° + case
- T199590; Lens 42° + case
- T300095; Lens 6° with case
- T911630ACC; Power supply for camera, 15 W/3 A
- T911631ACC; USB 2.0 A to USB Type-C cable, 0.9 m
- T911633ACC; Power supply for battery charger
- T911705ACC; USB Type-C to USB Type-C cable (USB 2.0 standard), 1.0 m
- T911706ACC; Car adapter 12 V
- T911845ACC; USB Type-C to HDMI and PD adapter
- T911846ACC; USB 2.0 A to USB Type-C with Power supply
- T199300ACC; Battery
- T199610; Battery charger
- T199347ACC; Hard transport case
- T199609; Option, Macro mode 71/103 µm for 24°
- T300030; Option, No radio
- T198495; Pouch
- T197771ACC; Bluetooth Headset
- T198583; FLIR Tools+ (download card incl. license key)
- T198696; FLIR ResearchIR Max 4 (hardware sec. dev.)
- T199013; FLIR ResearchIR Max 4 (printed license key)
- T199043; FLIR ResearchIR Max 4 Upgrade (printed license key)

27.17 FLIR T840 42° + 14°

P/N: 82507-0201
Rev.: 55390

Imaging and optical data	
Infrared resolution	464 × 348 pixels
UltraMax (super-resolution)[19]	In FLIR Tools
NETD	• <30 mK, 42° @ +30°C (+86°F) • <50 mK, 14° @ +30°C (+86°F)
Field of view	• 42° × 32° • 14° × 10°
Minimum focus distance	• 0.15 m (0.49 ft.), 42° • 1.0 m (3.28 ft.), 14°
Minimum focus distance with MSX	• 0.65 m (2.13 ft.), 42° • 1.0 m (3.28 ft.), 14°
Focal length	• 10 mm (0.39 in.), 42° • 29 mm (1.41 in.), 14°
Spatial resolution (IFOV)	• 1.66 mrad/pixel, 42° • 0.52 mrad/pixel, 14°
Available extra lenses	• 24° (AutoCal) • 6° (service calibration required)
Lens identification	Automatic
f number	• 1.1, 42° • 1.5, 14°
Image frequency	30 Hz
Focus	• Continuous LDM • One-shot LDM • One-shot contrast • Manual
Field of view match	Yes
Digital zoom	1–6× continuous

Detector data	
Focal plane array/spectral range	Uncooled microbolometer/7.5–14 µm
Detector pitch	17 µm

Image presentation	
Resolution (display)	640 × 480 pixels (VGA)
Surface brightness (cd/m^2)	400
Screen size	4 in.
Viewing angle	80°
Color depth (bits)	24

19. Not supported when using macro.

Image presentation	
Aspect ratio	4:3
Auto-rotation	Yes
Touchscreen	Optically bonded PCAP
Display technology	IPS
Cover glass material	Dragontrail®
Programmable buttons	2
Viewfinder	Yes
Image adjustment	• Automatic • Automatic maximum • Automatic minimum • Manual

Image presentation modes	
Infrared image	Yes
Visual image	Yes
MSX	Yes
Picture in picture	Resizable and movable
Gallery	Yes

Measurement		
Camera temperature range	Object temperature range	Accuracy — for ambient temperature +15 to +35°C (+59 to +95° F)
–20 to +120°C (–4 to +248°F)	–20 to +100°C (–4 to +212°F)	±2°C (±3.6°F)
	+100 to +120°C (+212 to +248° F)	±2%
0 to +650°C (+32 to +1202°F)	0 to +100°C (+32 to +212°F)	±2°C (±3.6°F)
	+100 to + 650°C (+212 to +1202°F)	±2%
+300 to +1500°C (+572 to +2732°F)	+300 to +1500°C (+572 to +2732°F)	±2%

Measurement analysis	
Spotmeter	3 in live mode
Area	3 in live mode
Automatic hot/cold detection	Automatic maximum/minimum markers within area
Measurement presets	• No measurements • Center spot • Hot spot • Cold spot • User preset 1 • User preset 2
Difference temperature	Yes
Reference temperature	Yes
Emissivity correction	Yes, variable from 0.01 to 1.0 or selected from materials list
Measurement corrections	Yes

Measurement analysis	
External optics/windows correction	Yes
Screening	0.5°C (0.9°F) accuracy at 37°C (98.6°F) with reference

Alarm	
Color alarm (isotherm)	• Above • Below • Interval • Condensation (moisture/humidity/dewpoint) • Insulation
Measurement function alarm	Audible/visual alarms (above/below) on any selected measurement function

Set-up	
Color palettes	• Iron • Gray • Rainbow • Arctic • Lava • Rainbow HC
Setup commands	Local adaptation of units, language, date, and time formats
Languages	21

Service functions	
Camera software update	Use PC software FLIR Tools

Storage of images	
Storage media	Removable memory: SD card
Time lapse (Periodic image storage)	10 seconds to 24 hours (infrared)
Remote control operation	• Using FLIR Tools (using USB cable) • FLIR Tools Mobile (over Wi-Fi)
Image file format	Standard JPEG, measurement data included. Infrared-only mode.

Image annotations	
Voice	60 seconds with built-in microphone and speaker (and via Bluetooth) on still images and video
Text	Text from predefined list or soft keyboard on touchscreen
Visual image annotation	Yes
Image sketch	Yes: on infrared only
Sketch	From touchscreen
METERLiNK	Wireless connection (Bluetooth) to: FLIR meters with METERLiNK
Laser distance meter information	Yes
Area measurement information	Yes
GPS	Location data automatically added to every still image and first frame in video from built-in GPS

Video recording in camera	
Radiometric infrared-video recording	RTRR (.csq)
Non-radiometric infrared-video recording	H.264 to memory card
Visual video recording	H.264 to memory card

Video streaming	
Radiometric infrared-video streaming (compressed)	Over UVC
Non-radiometric video streaming (compressed: IR, MSX, visual, Picture in Picture)	• H.264 (AVC) over RTSP (Wi-Fi) • MPEG4 over RTSP (Wi-Fi) • MJPEG over UVC and RTSP (Wi-Fi)
Visual video streaming	Yes

Digital camera	
Resolution	5 MP with LED light
Focus	Fixed
Field of view	53° × 41°
Video lamp	Built-in LED light

Laser pointer	
Laser alignment	Position is automatically displayed on the infrared image
Laser distance meter	Activated by dedicated button
Laser	Class 2, 0.05–40 m (0.16–131 ft.) ±1% of measured distance

Data communication interfaces	
Interfaces	USB 2.0, Bluetooth, Wi-Fi, DisplayPort
METERLiNK/Bluetooth	Communication with headset and external sensors
Wi-Fi	Peer to peer (ad hoc) or infrastructure (network)
Audio	Microphone and speaker for voice annotation of images
USB	USB Type-C: data transfer/video/power
USB standard	USB 2.0 High Speed
Video out	DisplayPort
Video connector type	DisplayPort over USB Type-C

Radio	
Operating frequency	Bluetooth + EDR/LE: 2402–2480 MHz WLAN 2.4 GHz: 2412–2462 MHz WLAN 5 GHz: 5150–5350 MHz (DFS: only slave mode) Note that frequency band 5150–5350 MHz is for indoor use only, see national regulations.
RF output (EIRP)	Bluetooth + EDR/LE: < 10 dBm WLAN: < 17 dBm
Antenna	Integrated PIFA antenna (gain: maximum 1.4 dBi)

Power system	
Battery type	Rechargeable Li-ion battery
Battery voltage	3.6 V
Battery operating time	> 4 hours at 25°C (68°F) with typical use
Charging system	In camera (AC adapter or 12 V from a vehicle) or two-bay charger
Charging time (using two-bay charger)	3.5 h to 90% capacity, on-screen indicator
Charging temperature	0°C to +45°C (+32°F to +113°F), except for the Korean market: +10°C to +45°C (+50°F to +113°F)
External power operation	AC adapter 90–260 V AC (50/60 Hz) or 12 V from a vehicle (cable with standard plug, optional)
Power management	Automatic shut-down and sleep mode

Environmental data	
Operating temperature range	–15 to +50°C (5–122°F)
Storage temperature range	–40 to +70°C (–40 to 158°F)
Humidity (operating and storage)	IEC 60068-2-30/24 hours, 95% relative humidity, 25–40°C (77–104°F)/2 cycles
EMC	• ETSI EN 301 489-1 (radio) • ETSI EN 301 489-17 • EN 61000-6-2 (immunity) • EN 61000-6-3 (emission) • FCC 47 CFR Part 15 Class B (emission)
Radio spectrum	• ETSI EN 300 228 • FCC Part 15.249 • RSS-247 Issue 2
Encapsulation	IP 54 (IEC 60529)
Shock	25g (IEC 60068-2-27)
Vibration	2g (IEC 60068-2-6)
Safety	EN/UL/CSA/PSE 60950-1

Physical data	
Weight (including battery)	1.4 kg (3.1 lb.)
Size (L × W × H)	• Lens vertical: 150.5 × 201.3 × 84.1 mm (5.9 × 7.9 × 3.3 in.) • Lens horisontal: 150.5 × 201.3 × 167.3 mm (5.9 × 7.9 × 6.6 in.)
Battery weight	195 g (6.89 oz.)
Battery size (L × W × H)	59 × 66 × 94 mm (2.3 × 2.6 × 3.7 in.)
Tripod mounting	UNC ¼″-20
Housing material	PCABS with TPE, magnesium
Color	Black

Warranty and service	
Warranty	http://www.flir.com/warranty/

Shipping information	
Packaging, type	Cardboard box
Packaging, contents	• Accessory box I: ◦ Power supply for battery charger ◦ Power supply, 15 W/3 A ◦ Printed documentation ◦ SD card (8 GB) ◦ USB 2.0 A to USB Type-C cable ◦ USB Type-C to HDMI and PD adapter ◦ USB Type-C to USB Type-C cable (USB 2.0 standard) • Accessory box II: ◦ Lens cap strap ◦ Lens cleaning cloth ◦ Neck strap ◦ Small eyecup • Battery (2 ea) • Battery charger • Extra lens, 14° • Hard transport case • Infrared camera with lens • Lens cap, front • Lens cap, front and rear (only for extra lenses)
Packaging, size	500 × 190 × 370 mm (19.7 × 7.5 × 14.6 in.)
EAN-13	4743254004191
UPC-12	845188019020
Country of origin	Estonia

Supplies & accessories:

- T130337ACC; Calibration target
- T199588; Lens 14° + case
- T199589; Lens 24° + case
- T199590; Lens 42° + case
- T300095; Lens 6° with case
- T911630ACC; Power supply for camera, 15 W/3 A
- T911631ACC; USB 2.0 A to USB Type-C cable, 0.9 m
- T911633ACC; Power supply for battery charger
- T911705ACC; USB Type-C to USB Type-C cable (USB 2.0 standard), 1.0 m
- T911706ACC; Car adapter 12 V
- T911845ACC; USB Type-C to HDMI and PD adapter
- T911846ACC; USB 2.0 A to USB Type-C with Power supply
- T199300ACC; Battery
- T199610; Battery charger
- T199347ACC; Hard transport case
- T199609; Option, Macro mode 71/103 µm for 24°
- T300030; Option, No radio
- T198495; Pouch
- T197771ACC; Bluetooth Headset
- T198583; FLIR Tools+ (download card incl. license key)
- T198696; FLIR ResearchIR Max 4 (hardware sec. dev.)
- T199013; FLIR ResearchIR Max 4 (printed license key)
- T199043; FLIR ResearchIR Max 4 Upgrade (printed license key)

28 Mechanical drawings

[See next page]

Camera housing

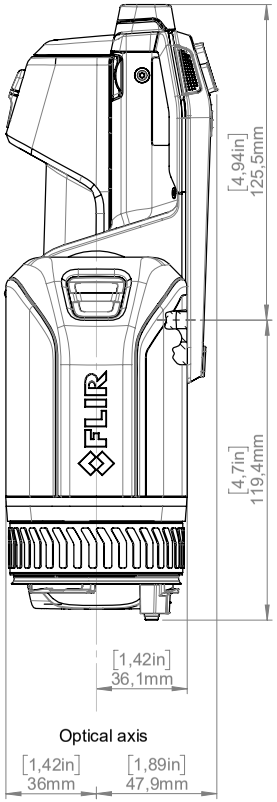

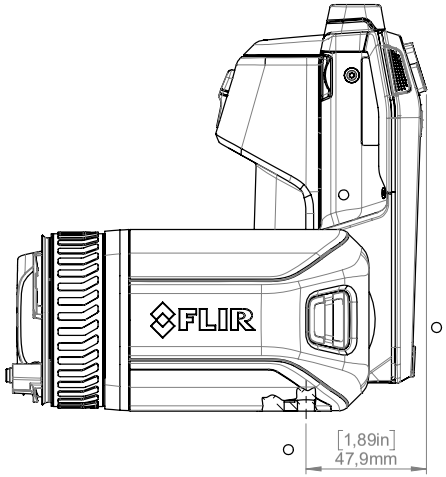

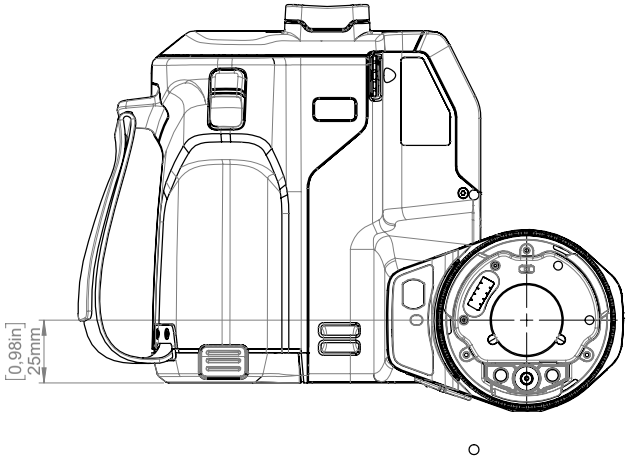

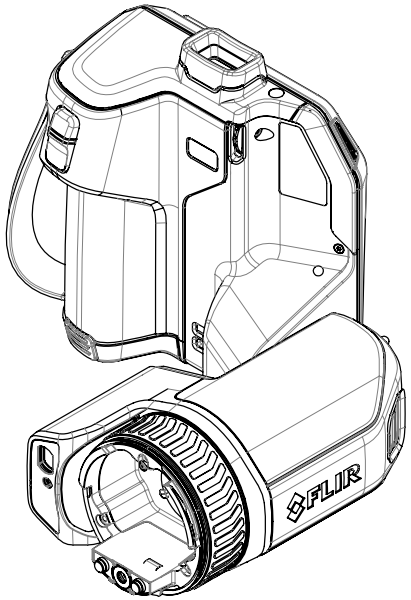

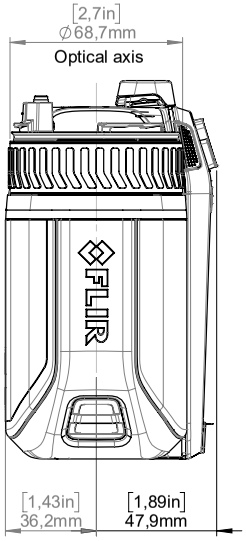

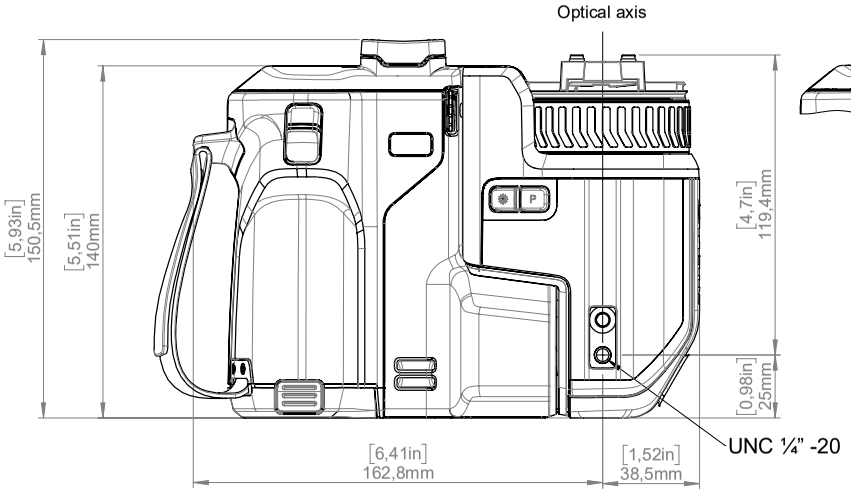

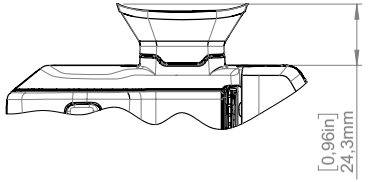

Modified	Check	Drawn by
2018-09-24	JOHE	R&D Instruments

Denomination

Basic dimensions FLIR T8xx

Size	Sheet
A3	1(4)
Scale 1:2	
Drawing No. T129914	Rev A

© 2016, FLIR Systems, Inc. All rights reserved worldwide. No part of this drawing may be reproduced, stored in a retrieval system, or transmitted in any form, or by any means, electronic, mechanical, photocopying, recording, or otherwise, without written permission from FLIR Systems, Inc. Specifications subject to change without further notice. Dimensional data is based on nominal values. Products may be subject to regional market considerations. License procedures may apply. Product may be subject to US Export Regulations. Please refer to exportquestions@flir.com with any questions. Diversion contrary to US law is prohibited.

Camera with Lens IR f=10mm (42°)

Camera with Lens IR f=17mm (24°)

Camera with Lens IR f=29mm (14°)

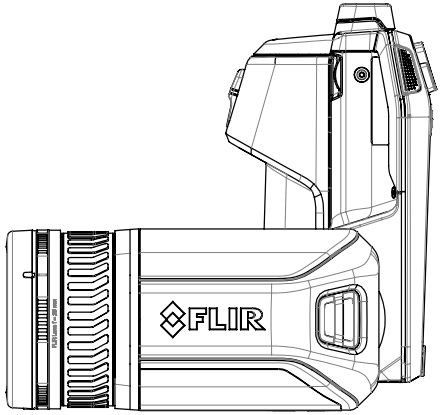

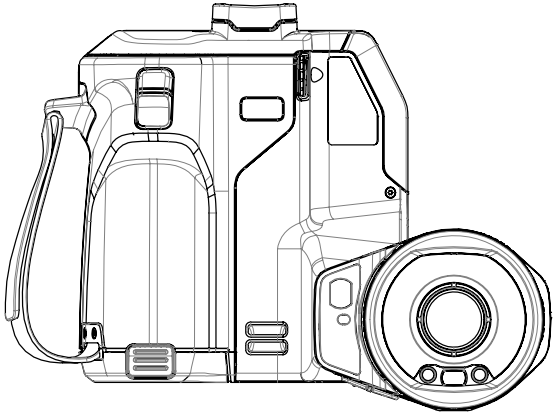

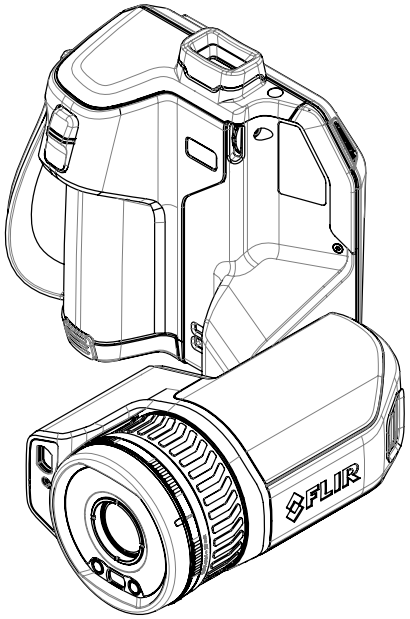

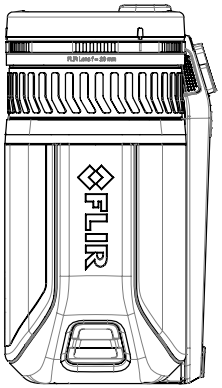

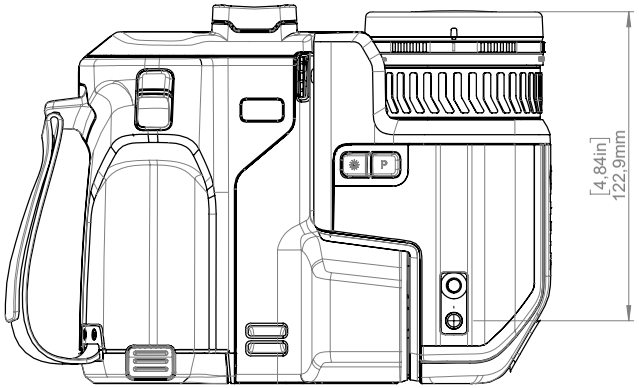

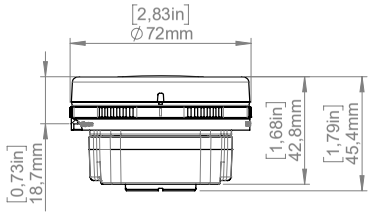

For additional dimensions see page 1

Modified	Check	Drawn by	
2018-09-24	JOHE	R&D Instruments	FLIR

Denomination

Basic dimensions FLIR T8xx

Size	Sheet
A3	2(4)
Scale 1:5	
Drawing No. T129914	Rev A

© 2016, FLIR Systems, Inc. All rights reserved worldwide. No part of this drawing may be reproduced, stored in a retrieval system, or transmitted in any form, or by any means, electronic, mechanical, photocopying, recording, or otherwise, without written permission from FLIR Systems, Inc. Specifications subject to change without further notice. Dimensional data is based on nominal values. Products may be subject to regional market considerations. License procedures may apply. Product may be subject to US Export Regulations. Please refer to exportquestions@flir.com with any questions. Diversion contrary to US law is prohibited.

Camera with Lens IR f=70mm (6°)

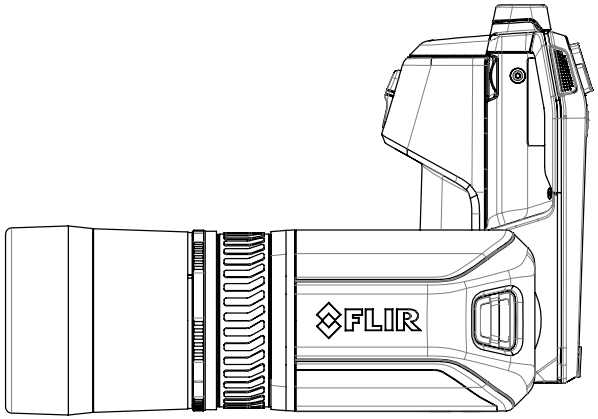

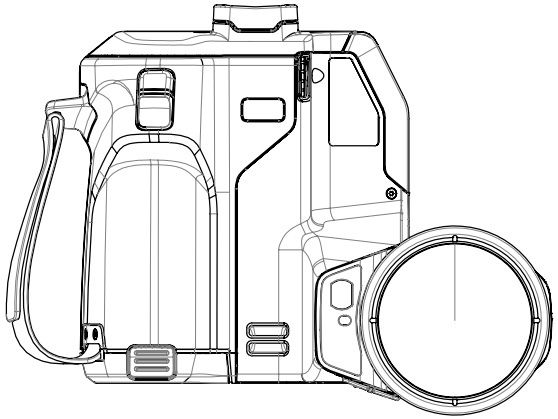

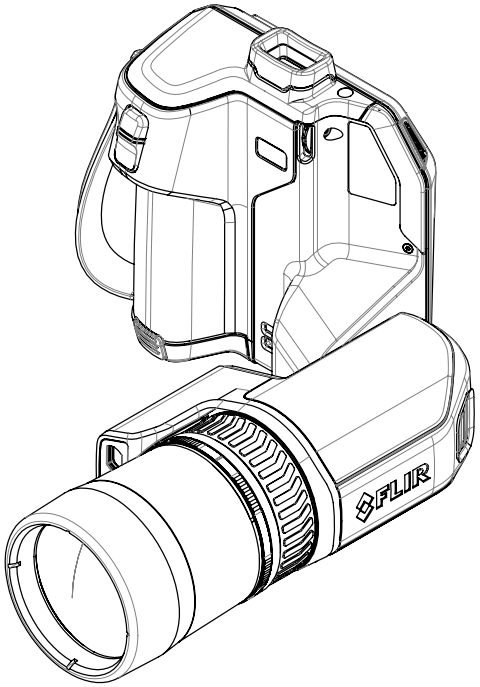

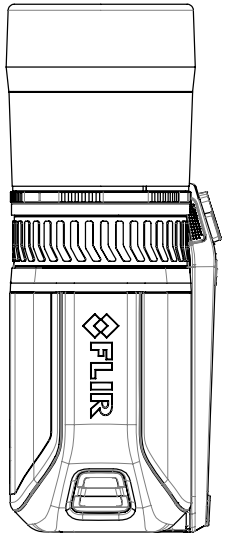

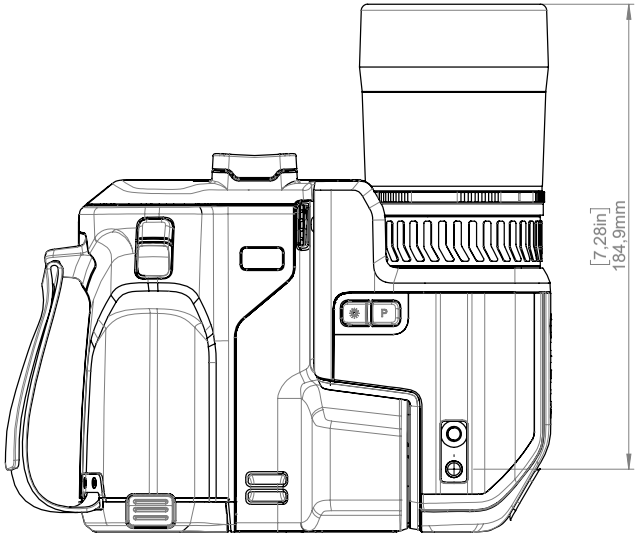

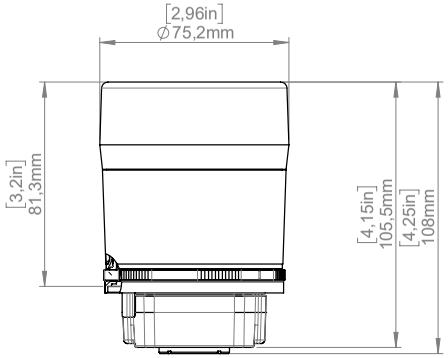

For additional dimensions see page 1

Modified	Check	Drawn by	
2018-09-24	JOHE	R&D Instruments	FLIR
Denomination: Basic dimensions FLIR T8xx		Size: A3	
		Scale: 1:5	Sheet: 3(4)
		Drawing No.: T129914	Rev: A

© 2016, FLIR Systems, Inc. All rights reserved worldwide. No part of this drawing may be reproduced, stored in a retrieval system, or transmitted in any form, or by any means, electronic, mechanical, photocopying, recording, or otherwise, without written permission from FLIR Systems, Inc. Specifications subject to change without further notice. Dimensional data is based on nominal values. Products may be subject to regional market considerations. License procedures may apply. Product may be subject to US Export Regulations. Please refer to exportquestions@flir.com with any questions. Diversion contrary to US law is prohibited.

29 CE Declaration of conformity

[See next page]

FLIR | The World's Sixth Sense™

February 2, 2019 Täby, Sweden AQ320246

CE Declaration of Conformity – EU Declaration of Conformity

Product: FLIR T5XX-, T8XX- and GF7X-series
Name and address of the manufacturer:
FLIR Systems AB
PO Box 7376
SE-187 15 Täby, Sweden

This declaration of conformity is issued under the sole responsibility of the manufacturer.
The object of the declaration: FLIR T5XX-, T8XX- and GF7X-series (Product Model Name FLIR-T8210).
The object of the declaration described above is in conformity with the relevant Union harmonisation legislation:

Directives:

Directive	2012/19/EU	Waste electrical and electric equipment
Directive	2014/53/EU	Radio Equipment Directive (RED)
Directive	1999/519/EC	Limitation of exposure to electromagnetic fields (SAR)
Directive	2011/65/EU	RoHS and 2015/830/EU

Standards:

EMC Radio:	ETSI EN 301 489-1 + -17	EMC for radio, broadband data transmission
Emission:	EN 61000-6-3/A1:2011	EMC – Generic standards
Immunity:	EN 61000-6-2:2005	Electromagnetic Compability Generic
	EN 301489-1:2016 v2.1.0	ERM – EMC for radio equipment
	EN 301489-17:2012 v2.2.1	ERM – EMC Wideband data
Laser:	EN 60825-1	Safety of laser products
Radio:	ETSI EN 300 328 v2.1.1	Harmonized EN covering essential requirements of the R&TTE Directive
	ETSI EN 301 893 v.2.1.1	5GHz WLAN
	EN 303 413 v1.1.0	Radio Spectrum Efficiency (gps)
SAR:	EN 50566:2013/AC:2014	Handheld and body mounted wireless
	EN 62209-02:2010	Handheld and body mounted wireless
Safety:	IEC 60950-1:2005+A1:2009+ A2:2013 EN 60950-1:2006+ A11:2009+AC:2011+A12:2011	Information technology equipment
RoHS:	EN 50581:2012	Technical documentation

FLIR Systems AB
Quality Assurance

Lea Dabiri
Quality Manager

30 Application examples

30.1 Moisture & water damage

30.1.1 General

It is often possible to detect moisture and water damage in a house by using an infrared camera. This is partly because the damaged area has a different heat conduction property and partly because it has a different thermal capacity to store heat than the surrounding material.

Many factors can come into play as to how moisture or water damage will appear in an infrared image.

For example, heating and cooling of these parts takes place at different rates depending on the material and the time of day. For this reason, it is important that other methods are used as well to check for moisture or water damage.

30.1.2 Figure

The image below shows extensive water damage on an external wall where the water has penetrated the outer facing because of an incorrectly installed window ledge.

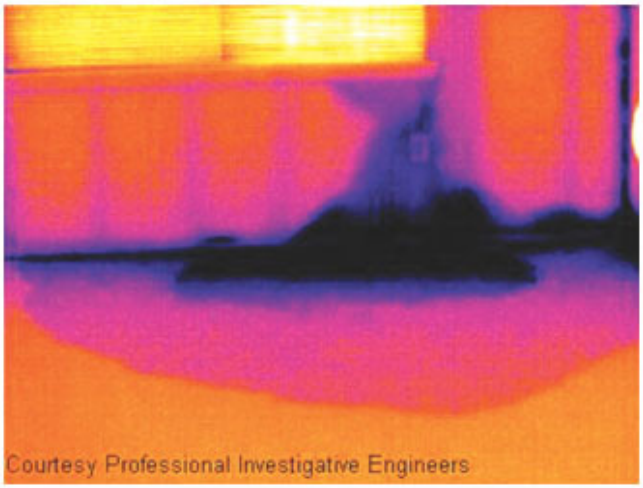

30.2 Faulty contact in socket

30.2.1 General

Depending on the type of connection a socket has, an improperly connected wire can result in local temperature increase. This temperature increase is caused by the reduced contact area between the connection point of the incoming wire and the socket , and can result in an electrical fire.

A socket's construction may differ dramatically from one manufacturer to another. For this reason, different faults in a socket can lead to the same typical appearance in an infrared image.

Local temperature increase can also result from improper contact between wire and socket, or from difference in load.

30.2.2 Figure

The image below shows a connection of a cable to a socket where improper contact in the connection has resulted in local temperature increase.

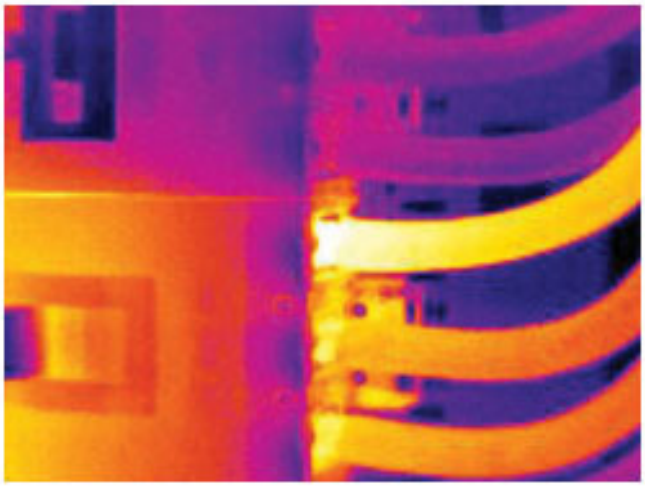

30.3 Oxidized socket

30.3.1 General

Depending on the type of socket and the environment in which the socket is installed, oxides may occur on the socket's contact surfaces. These oxides can lead to locally increased resistance when the socket is loaded, which can be seen in an infrared image as local temperature increase.

A socket’s construction may differ dramatically from one manufacturer to another. For this reason, different faults in a socket can lead to the same typical appearance in an infrared image.

Local temperature increase can also result from improper contact between a wire and socket, or from difference in load.

30.3.2 Figure

The image below shows a series of fuses where one fuse has a raised temperature on the contact surfaces against the fuse holder. Because of the fuse holder’s blank metal, the temperature increase is not visible there, while it is visible on the fuse’s ceramic material.

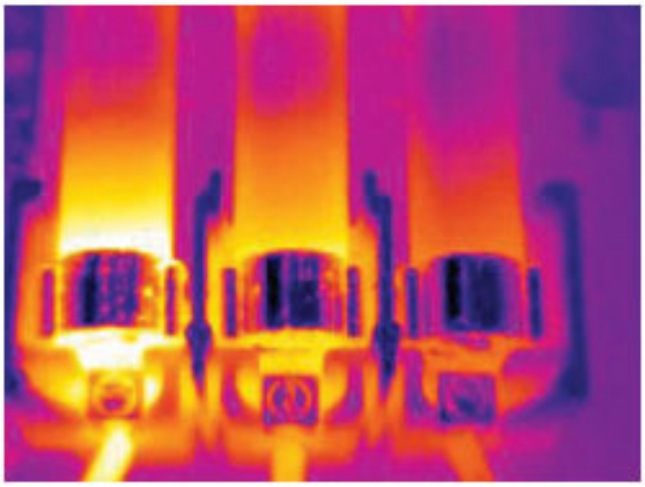

30.4 Insulation deficiencies

30.4.1 General

Insulation deficiencies may result from insulation losing volume over the course of time and thereby not entirely filling the cavity in a frame wall.

An infrared camera allows you to see these insulation deficiencies because they either have a different heat conduction property than sections with correctly installed insulation, and/or show the area where air is penetrating the frame of the building.

When you are inspecting a building, the temperature difference between the inside and outside should be at least 10°C (18°F). Studs, water pipes, concrete columns, and similar components may resemble an insulation deficiency in an infrared image. Minor differences may also occur naturally.

30.4.2 Figure

In the image below, insulation in the roof framing is lacking. Due to the absence of insulation, air has forced its way into the roof structure, which thus takes on a different characteristic appearance in the infrared image.

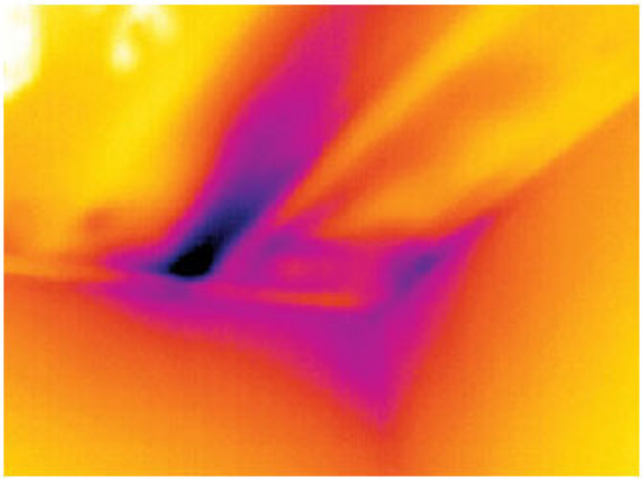

30.5 Draft

30.5.1 General

Draft can be found under baseboards, around door and window casings, and above ceiling trim. This type of draft is often possible to see with an infrared camera, as a cooler airstream cools down the surrounding surface.

When you are investigating draft in a house, there should be sub-atmospheric pressure in the house. Close all doors, windows, and ventilation ducts, and allow the kitchen fan to run for a while before you take the infrared images.

An infrared image of draft often shows a typical stream pattern. You can see this stream pattern clearly in the picture below.

Also keep in mind that drafts can be concealed by heat from floor heating circuits.

30.5.2 Figure

The image below shows a ceiling hatch where faulty installation has resulted in a strong draft.

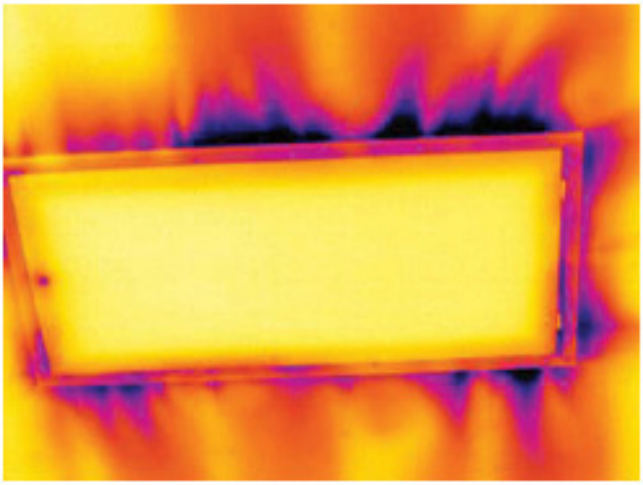

31 About FLIR Systems

FLIR Systems was established in 1978 to pioneer the development of high-performance infrared imaging systems, and is the world leader in the design, manufacture, and marketing of thermal imaging systems for a wide variety of commercial, industrial, and government applications. Today, FLIR Systems embraces five major companies with outstanding achievements in infrared technology since 1958—the Swedish AGEMA Infrared Systems (formerly AGA Infrared Systems), the three United States companies Indigo Systems, FSI, and Inframetrics, and the French company Cedip.

Since 2007, FLIR Systems has acquired several companies with world-leading expertise in sensor technologies:

- Extech Instruments (2007)
- Ifara Tecnologías (2008)
- Salvador Imaging (2009)
- OmniTech Partners (2009)
- Directed Perception (2009)
- Raymarine (2010)
- ICx Technologies (2010)
- TackTick Marine Digital Instruments (2011)
- Aerius Photonics (2011)
- Lorex Technology (2012)
- Traficon (2012)
- MARSS (2013)
- DigitalOptics micro-optics business (2013)
- DVTEL (2015)
- Point Grey Research (2016)
- Prox Dynamics (2016)

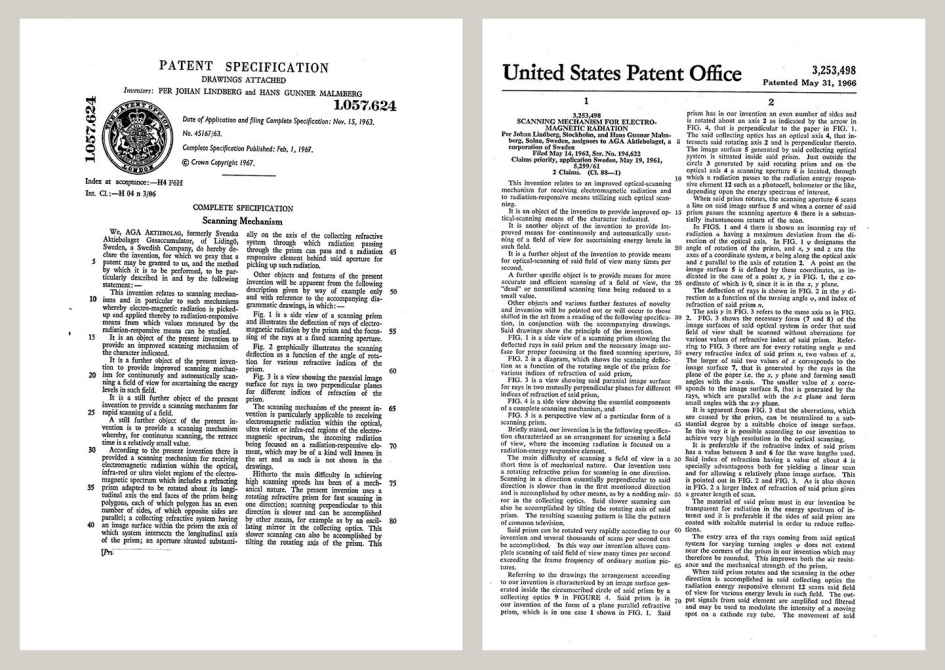

PATENT SPECIFICATION
DRAWINGS ATTACHED
Inventors: PER JOHAN LINDBERG and HANS GUNNER MALMBERG
1,057,624
Date of Application and filing Complete Specification: Nov. 15, 1963.
No. 45167/63.
Complete Specification Published: Feb. 1, 1967.
© Crown Copyright 1967.
Index at acceptance:—H4 F6H
Int. Cl.:—H 04 n 3/06

COMPLETE SPECIFICATION
Scanning Mechanism

United States Patent Office
3,253,498
Patented May 31, 1966

3,253,498
SCANNING MECHANISM FOR ELECTRO-MAGNETIC RADIATION
Per Johan Lindberg, Stockholm, and Hans Gunnar Malmberg, Solna, Sweden, assignors to AGA Aktiebolaget, a corporation of Sweden
Filed May 14, 1963, Ser. No. 194,622
Claims priority, application Sweden, May 19, 1961, 5,259/61
2 Claims. (Cl. 88—1)

This invention relates to an improved optical-scanning mechanism for receiving electromagnetic radiation and to radiation-responsive means utilizing such optical scanning.

It is an object of the invention to provide improved optical-scanning means of the character indicated.

It is another object of the invention to provide improved means for continuously and automatically scanning of a field of view for ascertaining energy levels in such field.

It is a further object of the invention to provide means for optical-scanning of said field of view many times per second.

A further specific object is to provide means for more accurate and efficient scanning of a field of view, the "dead" or nonutilized scanning time being reduced to a small value.

Other objects and various further features of novelty and invention will be pointed out or will occur to those skilled in the art from a reading of the following specification, in conjunction with the accompanying drawings. Said drawings show the principle of the invention.

FIG. 1 is a side view of a scanning prism showing the deflected rays in said prism and the necessary image surface for proper focussing at the fixed scanning aperture.

FIG. 2 is a diagram, which shows the scanning deflection as a function of the rotating angle of the prism for various indices of refraction of said prism,

FIG. 3 is a view showing said paraxial image surface for rays in two mutually perpendicular planes for different indices of refraction of the prism.

FIG. 4 is a side view showing the essential components of a complete scanning mechanism, and

FIG. 5 is a perspective view of a particular form of a scanning prism.

Briefly stated, our invention is in the following specification characterized as an arrangement for scanning a field of view, where the incoming radiation is focused on a radiation-energy responsive element.

The main difficulty of scanning a field of view in a short time is of mechanical nature. Our invention uses a rotating refractive prism for scanning in one direction. Scanning in a direction essentially perpendicular to said direction is slower than in the first mentioned direction and is accomplished by other means, as by a nodding mirror in the collecting optics. Said slower scanning can also be accomplished by tilting the rotating axis of said prism. The resulting scanning pattern is like the pattern of common television.

Said prism can be rotated very rapidly according to our invention and several thousands of scans per second can be accomplished. In this way our invention allows complete scanning of said field of view many times per second exceeding the frame frequency of ordinary motion pictures.

Referring to the drawings the arrangement according to our invention is characterized by an image surface generated inside the circumscribed circle of said prism by a collecting optics 9 in FIGURE 4. Said prism is in our invention of the form of a plane parallel refractive prism, which is in one case 1 shown in FIG. 1. Said prism has in our invention an even number of sides and is rotated about an axis 2 as indicated by the arrow in FIG. 4, that is perpendicular to the paper in FIG. 1. The said collecting optics has an optical axis 4, that intersects said rotating axis 2 and is perpendicular thereto. The image surface 5 generated by said collecting optical system is situated inside said prism. Just outside the circle 3 generated by said rotating prism and on the optical axis 4 a scanning aperture 6 is located, through which a radiation passes to the radiation energy responsive element 12 such as a photocell, bolometer or the like, depending upon the energy spectrum of interest.

When said prism rotates, the scanning aperture 6 scans a line on said image surface 5 and when a corner of said prism passes the scanning aperture 6 there is a substantially instantaneous return of the scan.

In FIGS. 1 and 4 there is shown an incoming ray of radiation a having a maximum deviation from the direction of the optical axis. In FIG. 1 φ designates the angle of rotation of the prism, and x, y and z are the axes of a coordinate system, x being along the optical axis and z parallel to the axis of rotation 2. A point on the image surface 5 is defined by these coordinates, as indicated in the case of a point x, y in FIG. 1, the z coordinate of which is 0, since it is in the x, y plane.

The deflection of rays is shown in FIG. 2 in the y direction as a function of the turning angle φ, and index of refraction of said prism n.

The axis y in FIG. 1 refers to the same axis as in FIG. 2. FIG. 3 shows the necessary form (7 and 8) of the image surfaces of said optical system in order that said field of view shall be scanned without aberrations for various values of refractive index of said prism. Referring to FIG. 3 there are for every rotating angle φ and every refractive index n of said prism n, two values of x. The larger of said two values of x corresponds to the image surface 7, that is generated by the rays in the plane of the paper i.e. the x, y plane and forming small angles with the x-axis. The smaller value of x corresponds to the image surface 8, that is generated by the rays, which are parallel with the x-z plane and form small angles with the x-y plane.

It is apparent from FIG. 3 that the aberrations, which are caused by the prism, can be neutralized to a substantial degree by a suitable choice of image surface. In this way it is possible according to our invention to achieve very high resolution in the optical scanning.

It is preferable if the refractive index of said prism has a value between 3 and 6 for the wave lengths used. Said index of refraction having a value of about 4 is specially advantageous both for yielding a linear scan and for allowing a relatively plane image surface. This is pointed out in FIG. 2 and FIG. 3. As is also shown in FIG. 2 a larger index of refraction of said prism gives a greater length of scan.

The material of said prism must in our invention be transparent for radiation in the energy spectrum of interest and it is preferable if the sides of said prism are coated with suitable material in order to reduce reflections.

The entry area of the rays coming from said optical system for varying turning angles φ does not extend near the corners of the prism in our invention which may therefore be rounded. This improves both the air resistance and the mechanical strength of the prism.

When said prism rotates and the scanning in the other direction is accomplished in said collecting optics the radiation energy responsive element 12 scans said field of view for various energy levels in such field. The output signals from said element are amplified and filtered and may be used to modulate the intensity of a moving spot on a cathode ray tube. The movement of said

Figure 31.1 Patent documents from the early 1960s

FLIR Systems has three manufacturing plants in the United States (Portland, OR, Boston, MA, Santa Barbara, CA) and one in Sweden (Stockholm). Since 2007 there is also a

manufacturing plant in Tallinn, Estonia. Direct sales offices in Belgium, Brazil, China, France, Germany, Great Britain, Hong Kong, Italy, Japan, Korea, Sweden, and the USA—together with a worldwide network of agents and distributors—support our international customer base.

FLIR Systems is at the forefront of innovation in the infrared camera industry. We anticipate market demand by constantly improving our existing cameras and developing new ones. The company has set milestones in product design and development such as the introduction of the first battery-operated portable camera for industrial inspections, and the first uncooled infrared camera, to mention just two innovations.

Figure 31.2 1969: Thermovision Model 661. The camera weighed approximately 25 kg (55 lb.), the oscilloscope 20 kg (44 lb.), and the tripod 15 kg (33 lb.). The operator also needed a 220 VAC generator set, and a 10 L (2.6 US gallon) jar with liquid nitrogen. To the left of the oscilloscope the Polaroid attachment (6 kg (13 lb.)) can be seen.

Figure 31.3 2015: FLIR One, an accessory to iPhone and Android mobile phones. Weight: 90 g (3.2 oz.).

FLIR Systems manufactures all vital mechanical and electronic components of the camera systems itself. From detector design and manufacturing, to lenses and system electronics, to final testing and calibration, all production steps are carried out and supervised by our own engineers. The in-depth expertise of these infrared specialists ensures the accuracy and reliability of all vital components that are assembled into your infrared camera.

31.1 More than just an infrared camera

At FLIR Systems we recognize that our job is to go beyond just producing the best infrared camera systems. We are committed to enabling all users of our infrared camera systems to work more productively by providing them with the most powerful camera–software combination. Especially tailored software for predictive maintenance, R & D, and process monitoring is developed in-house. Most software is available in a wide variety of languages.

We support all our infrared cameras with a wide variety of accessories to adapt your equipment to the most demanding infrared applications.

31.2 Sharing our knowledge

Although our cameras are designed to be very user-friendly, there is a lot more to thermography than just knowing how to handle a camera. Therefore, FLIR Systems has founded the Infrared Training Center (ITC), a separate business unit, that provides certified training courses. Attending one of the ITC courses will give you a truly hands-on learning experience.

The staff of the ITC are also there to provide you with any application support you may need in putting infrared theory into practice.

31.3 Supporting our customers

FLIR Systems operates a worldwide service network to keep your camera running at all times. If you discover a problem with your camera, local service centers have all the equipment and expertise to solve it within the shortest possible time. Therefore, there is no need to send your camera to the other side of the world or to talk to someone who does not speak your language.

32 Terms, laws, and definitions

Term	Definition
Absorption and emission[20]	The capacity or ability of an object to absorb incident radiated energy is always the same as the capacity to emit its own energy as radiation
Apparent temperature	uncompensated reading from an infrared instrument, containing all radiation incident on the instrument, regardless of its sources[21]
Color palette	assigns different colors to indicate specific levels of apparent temperature. Palettes can provide high or low contrast, depending on the colors used in them
Conduction	direct transfer of thermal energy from molecule to molecule, caused by collisions between the molecules
Convection	heat transfer mode where a fluid is brought into motion, either by gravity or another force, thereby transferring heat from one place to another
Diagnostics	examination of symptoms and syndromes to determine the nature of faults or failures[22]
Direction of heat transfer[23]	Heat will spontaneously flow from hotter to colder, thereby transferring thermal energy from one place to another[24]
Emissivity	ratio of the power radiated by real bodies to the power that is radiated by a blackbody at the same temperature and at the same wavelength[25]
Energy conservation[26]	The sum of the total energy contents in a closed system is constant
Exitant radiation	radiation that leaves the surface of an object, regardless of its original sources
Heat	thermal energy that is transferred between two objects (systems) due to their difference in temperature
Heat transfer rate[27]	The heat transfer rate under steady state conditions is directly proportional to the thermal conductivity of the object, the cross-sectional area of the object through which the heat flows, and the temperature difference between the two ends of the object. It is inversely proportional to the length, or thickness, of the object[28]
Incident radiation	radiation that strikes an object from its surroundings
IR thermography	process of acquisition and analysis of thermal information from non-contact thermal imaging devices
Isotherm	replaces certain colors in the scale with a contrasting color. It marks an interval of equal apparent temperature[29]

20. Kirchhoff's law of thermal radiation.
21. Based on ISO 18434-1:2008 (en).
22. Based on ISO 13372:2004 (en).
23. 2nd law of thermodynamics.
24. This is a consequence of the 2nd law of thermodynamics, the law itself is more complicated.
25. Based on ISO 16714-3:2016 (en).
26. 1st law of thermodynamics.
27. Fourier's law.
28. This is the one-dimensional form of Fourier's law, valid for steady-state conditions.
29. Based on ISO 18434-1:2008 (en)

Term	Definition
Qualitative thermography	thermography that relies on the analysis of thermal patterns to reveal the existence of and to locate the position of anomalies[30]
Quantitative thermography	thermography that uses temperature measurement to determine the seriousness of an anomaly, in order to establish repair priorities[30]
Radiative heat transfer	Heat transfer by the emission and absorption of thermal radiation
Reflected apparent temperature	apparent temperature of the environment that is reflected by the target into the IR camera[31]
Spatial resolution	ability of an IR camera to resolve small objects or details
Temperature	measure of the average kinetic energy of the molecules and atoms that make up the substance
Thermal energy	total kinetic energy of the molecules that make up the object[32]
Thermal gradient	gradual change in temperature over distance[31]
Thermal tuning	process of putting the colors of the image on the object of analysis, in order to maximize contrast

30. Based on ISO 10878-2013 (en).
31. Based on ISO 16714-3:2016 (en).
32. Thermal energy is part of the internal energy of an object.

33 Thermographic measurement techniques

33.1 Introduction

An infrared camera measures and images the emitted infrared radiation from an object. The fact that radiation is a function of object surface temperature makes it possible for the camera to calculate and display this temperature.

However, the radiation measured by the camera does not only depend on the temperature of the object but is also a function of the emissivity. Radiation also originates from the surroundings and is reflected in the object. The radiation from the object and the reflected radiation will also be influenced by the absorption of the atmosphere.

To measure temperature accurately, it is therefore necessary to compensate for the effects of a number of different radiation sources. This is done on-line automatically by the camera. The following object parameters must, however, be supplied for the camera:

- The emissivity of the object
- The reflected apparent temperature
- The distance between the object and the camera
- The relative humidity
- Temperature of the atmosphere

33.2 Emissivity

The most important object parameter to set correctly is the emissivity which, in short, is a measure of how much radiation is emitted from the object, compared to that from a perfect blackbody of the same temperature.

Normally, object materials and surface treatments exhibit emissivity ranging from approximately 0.1 to 0.95. A highly polished (mirror) surface falls below 0.1, while an oxidized or painted surface has a higher emissivity. Oil-based paint, regardless of color in the visible spectrum, has an emissivity over 0.9 in the infrared. Human skin exhibits an emissivity 0.97 to 0.98.

Non-oxidized metals represent an extreme case of perfect opacity and high reflexivity, which does not vary greatly with wavelength. Consequently, the emissivity of metals is low – only increasing with temperature. For non-metals, emissivity tends to be high, and decreases with temperature.

33.2.1 Finding the emissivity of a sample

33.2.1.1 Step 1: Determining reflected apparent temperature

Use one of the following two methods to determine reflected apparent temperature:

33.2.1.1.1 Method 1: Direct method

Follow this procedure:

1. Look for possible reflection sources, considering that the incident angle = reflection angle (a = b).

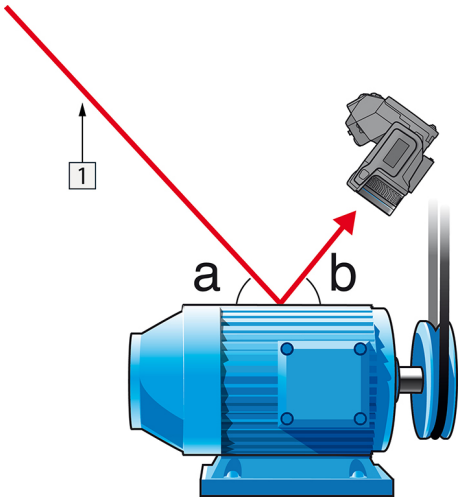

Figure 33.1 1 = Reflection source

2. If the reflection source is a spot source, modify the source by obstructing it using a piece if cardboard.

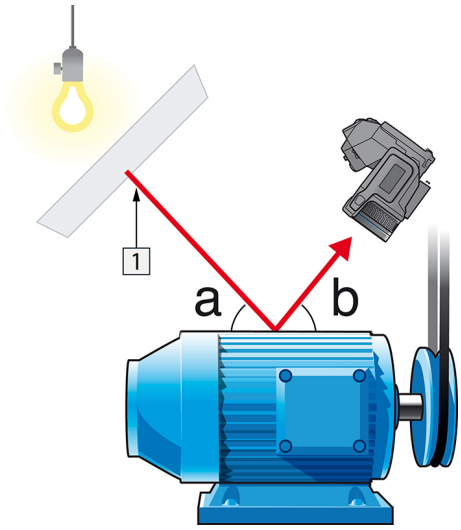

Figure 33.2 1 = Reflection source

3. Measure the radiation intensity (= apparent temperature) from the reflection source using the following settings:
   - Emissivity: 1.0
   - D_{obj}: 0

   You can measure the radiation intensity using one of the following two methods:

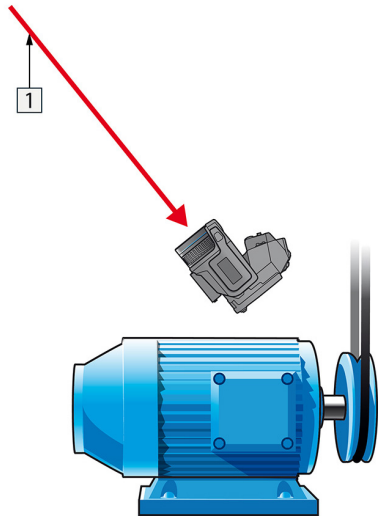

Figure 33.3 1 = Reflection source

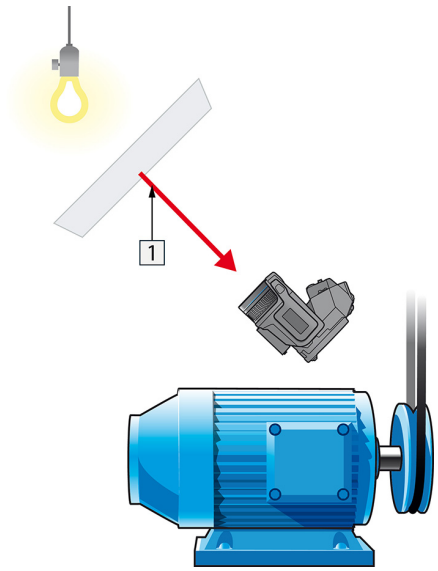

Figure 33.4 1 = Reflection source

You can not use a thermocouple to measure reflected apparent temperature, because a thermocouple measures *temperature*, but apparent temperatrure is *radiation intensity*.

33.2.1.1.2 Method 2: Reflector method

Follow this procedure:

1. Crumble up a large piece of aluminum foil.
2. Uncrumble the aluminum foil and attach it to a piece of cardboard of the same size.
3. Put the piece of cardboard in front of the object you want to measure. Make sure that the side with aluminum foil points to the camera.
4. Set the emissivity to 1.0.

5. Measure the apparent temperature of the aluminum foil and write it down. The foil is considered a perfect reflector, so its apparent temperature equals the reflected apparent temperature from the surroundings.

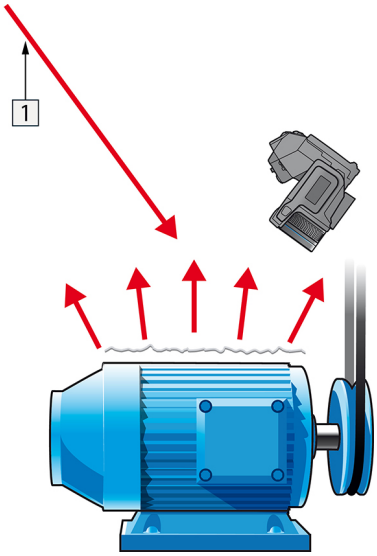

Figure 33.5 Measuring the apparent temperature of the aluminum foil.

33.2.1.2 Step 2: Determining the emissivity

Follow this procedure:

1. Select a place to put the sample.
2. Determine and set reflected apparent temperature according to the previous procedure.
3. Put a piece of electrical tape with known high emissivity on the sample.
4. Heat the sample at least 20 K above room temperature. Heating must be reasonably even.
5. Focus and auto-adjust the camera, and freeze the image.
6. Adjust *Level* and *Span* for best image brightness and contrast.
7. Set emissivity to that of the tape (usually 0.97).
8. Measure the temperature of the tape using one of the following measurement functions:
   - *Isotherm* (helps you to determine both the temperature and how evenly you have heated the sample)
   - *Spot* (simpler)
   - *Box Avg* (good for surfaces with varying emissivity).
9. Write down the temperature.
10. Move your measurement function to the sample surface.
11. Change the emissivity setting until you read the same temperature as your previous measurement.
12. Write down the emissivity.

Note

- Avoid forced convection
- Look for a thermally stable surrounding that will not generate spot reflections
- Use high quality tape that you know is not transparent, and has a high emissivity you are certain of
- This method assumes that the temperature of your tape and the sample surface are the same. If they are not, your emissivity measurement will be wrong.

33.3 Reflected apparent temperature

This parameter is used to compensate for the radiation reflected in the object. If the emissivity is low and the object temperature relatively far from that of the reflected it will be important to set and compensate for the reflected apparent temperature correctly.

33.4 Distance

The distance is the distance between the object and the front lens of the camera. This parameter is used to compensate for the following two facts:

- That radiation from the target is absorbed by the atmosphere between the object and the camera.
- That radiation from the atmosphere itself is detected by the camera.

33.5 Relative humidity

The camera can also compensate for the fact that the transmittance is also dependent on the relative humidity of the atmosphere. To do this set the relative humidity to the correct value. For short distances and normal humidity the relative humidity can normally be left at a default value of 50%.

33.6 Other parameters

In addition, some cameras and analysis programs from FLIR Systems allow you to compensate for the following parameters:

- Atmospheric temperature – *i.e.* the temperature of the atmosphere between the camera and the target
- External optics temperature – *i.e.* the temperature of any external lenses or windows used in front of the camera
- External optics transmittance – *i.e.* the transmission of any external lenses or windows used in front of the camera

34 The secret to a good thermal image

34.1 Introduction

The use of thermal cameras has spread to many professional environments in recent years. They are easy to handle, and thermal images are quick to take. Images can also be attached to reports easily, e.g., for an inspection of an electrical installation or building as evidence of work carried out or of any faults or deviations identified. However, people often forget that an image to be used as evidence or even proof before the courts must meet certain requirements: this is not achieved with a quick snapshot. So, what characterizes a really good thermal image?

34.2 Background

During the practical exercises in our thermography training classes we notice, time and time again, how difficult some participants find choosing the optimal camera settings for different tasks. Not everyone has a background in, for example, amateur photography (more on the difference between thermography and photography in the next section), and to take a good and meaningful thermal image you need some knowledge of photography, including its practical application. For this reason, it is hardly surprising that thermographers, particularly those without training, repeatedly produce reports with thermal images that are devoid of meaning or even support the wrong conclusions and are fit only for the waste bin. Unfortunately, such reports are found not only in companies in which thermography is more of an added bonus but also in businesses where these reports may be part of a critical process monitoring or maintenance program. There are two main reasons for this: either the users don't know what a good thermal image is or how to take one, or—for whatever reason—the job is not being done properly.

34.3 A good image

As thermography and photography are related, it makes sense to take a look at what is important to professional photographers. How do they characterize a good image? Three aspects can be pointed out as the most important:

1. An image has to touch the observer in some way. That means it needs to be unusual, striking, or unique, and has to arouse interest and, depending on the genre, emotion.
2. The composition and balance must be in harmony; the image detail and content must go together aesthetically.
3. The lighting must be interesting, such as back lighting or side lighting that casts dramatic shadows, or evening light or other pleasing illumination—whatever fits the overall effect that the photographer wants.

To what extent can these concepts be applied to thermography?

With thermography, the motif should also be interesting. In other words, our aim is to depict an object or its condition. Emotions are not required—facts have priority in thermal images (assuming they are not an art project!). In everyday working life, it is important to illustrate thermal patterns clearly and to facilitate temperature measurements.

The thermal image must also have suitable image detail and display the object at an appropriate size and position.

Without external illumination, neither visual sight nor photography is possible because what we see with our eyes or capture with a camera is reflected light. In thermography, the camera records both emitted and reflected radiation. Therefore, the relationship and intensity of the infrared radiation, both emitted by the object and by the surrounding environment, are important. Brightness and contrast in the image are then adjusted by changing the displayed temperature interval.

The comparison between photography and thermography can be summarized in a table using a few keywords:

Photography	Thermography
Interesting motif	The object to be examined
“Tells a story”	“Presents facts”
Aesthetically pleasing	Clear heat patterns
Emotive	Objective
Image detail	Image detail
Focus	Focus
Lighting	Emission and reflection
Brightness	Brightness
Contrast	Contrast

As with photography, in thermography there are countless possibilities for editing images —provided they are saved as radiometric images. However, not all settings can be changed, and not all image errors can be corrected.

34.4 The three unchangeables—the basis for a good image

34.4.1 Focus

A professional thermal image is always focused and sharp, and the object and heat pattern must be clear and easy to recognize.

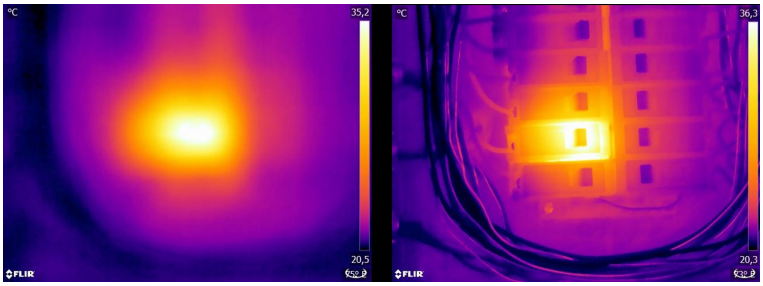

Figure 34.1 Only hazy “patches of heat” can be seen in the unfocused image (left). The focused image (right) clearly shows which object is being observed and where the object is warm.

A blurred image not only comes across as unprofessional and makes it harder to identify the object and any faults (see Figure 34.1) but can also lead to measurement errors (see Figure 34.2), which are more serious the smaller the measurement object. Even if all other parameters are set correctly, the measurement values from an unfocused thermal image are highly likely to be incorrect.

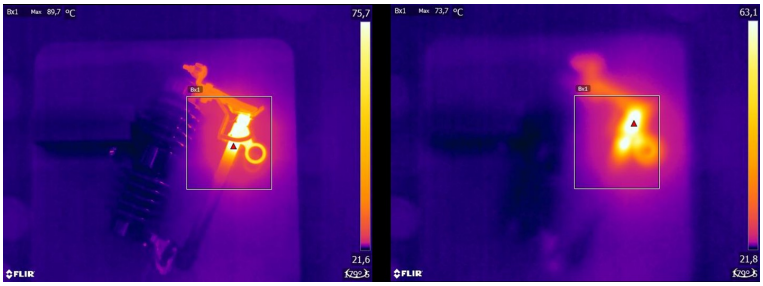

Figure 34.2 Focused thermal image (left) with a maximum temperature of T_{max} = 89.7°C (193.5°F) and an unfocused thermal image (right) with a maximum temperature of T_{max} = 73.7°C (164.7°F).

Of course, the size of the detector matrix also plays a role in image quality. Images taken by cameras with small detectors (i.e., with fewer pixels) are more blurred or “grainier” and give the impression that they are not focused (see Figure 34.3). It should also be noted that not every camera can be focused, and in this case the only means of focusing the camera is by changing the distance from the object.

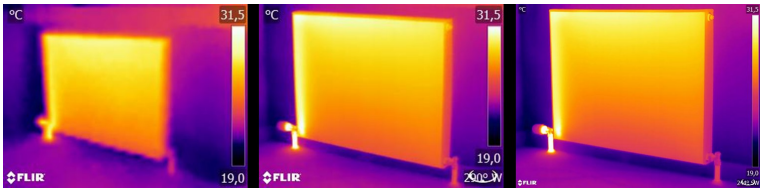

Figure 34.3 The same radiator from the same distance with the same settings, taken by three different thermal cameras: FLIR C2 (left), FLIR T440 (middle), and FLIR T640 (right).

34.4.2 Temperature range

For hand-held uncooled microbolometer cameras, the “exposure” is essentially preset by the image frame rate. This means that it is not possible to choose for how long—and therefore how much—radiation hits the camera detector. For this reason, an appropriate temperature range must be selected that matches the amount of incident radiation. If a temperature range is selected that is too low, the image will be oversaturated, as objects with higher temperatures emit more infrared radiation than colder objects. If you select a temperature range that is too high, the thermal image will be “underexposed,” as can be seen in Figure 34.4.

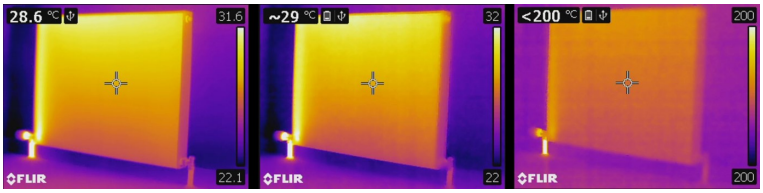

Figure 34.4 Images from a FLIR T440 with temperature ranges of –20 to +120°C, (left, –4 to +248°F), 0 to +650°C (middle, +32 to +1202°F) and +250 to +1200°C (right, +482 to +2192°F). All other settings are unchanged.

To take an image or temperature measurement, the lowest possible temperature range available on the camera should be selected. However, it must also include the highest temperature in the image (see Figure 34.5).

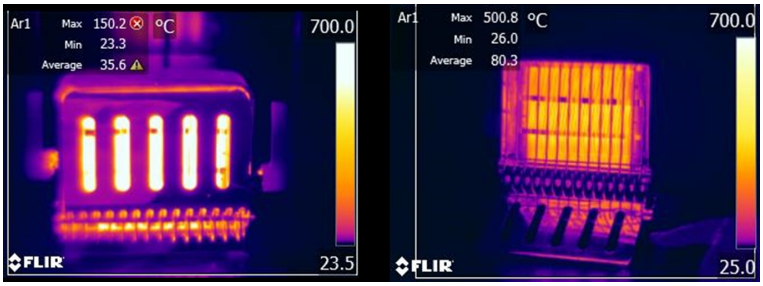

Figure 34.5 An image of the same object taken with different temperature ranges: –20 to 120°C (left, –4 to +248°F) and 0 to 650°C (right, +32 to +1202°F). The temperature in the left image is displayed with a warning sign (a red circle with a white cross) because the measured values are outside the calibrated range.

Depending on the camera model and configuration options, overdriven and underdriven areas can be displayed in a contrasting color.

34.4.3 Image detail and distance from the object

Illumination in photography corresponds in thermography to the interplay of radiation from the object and reflected radiation from the surrounding environment. The latter is unwanted because interfering—or, at the very least, spot—reflections need to be avoided. This is achieved by choosing a suitable position from where to take images. It is also advisable to select a position from which the object of interest can be seen clearly and is not hidden. This may seem obvious but in the building sector, for example, it is common to find reports in which pipes or windows to be investigated are hidden behind sofas, indoor plants or curtains. Figure 34.6 illustrates this situation—which occurs all too regularly.

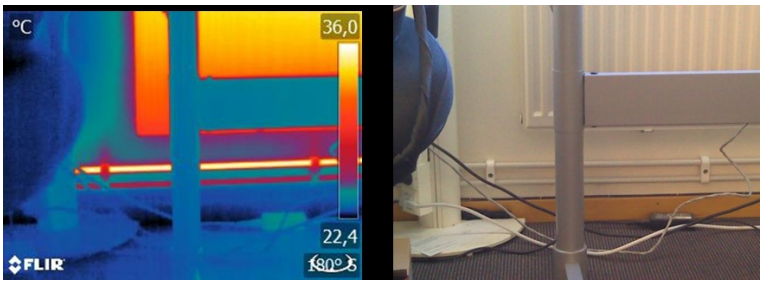

Figure 34.6 “Thermographic inspection” of an inaccessible object.

It is also important that the object under investigation, or its areas of interest, take up the whole thermal image. This is particularly true when measuring the temperature of small objects. The spot tool must be completely filled by the object to enable correct temperature measurements. Since the field of view and therefore the spot size are determined by both the distance to the object and the camera’s optics, in such situations the distance to the object must either be reduced (get closer!) or a telephoto lens must be used (see Figure 34.7).

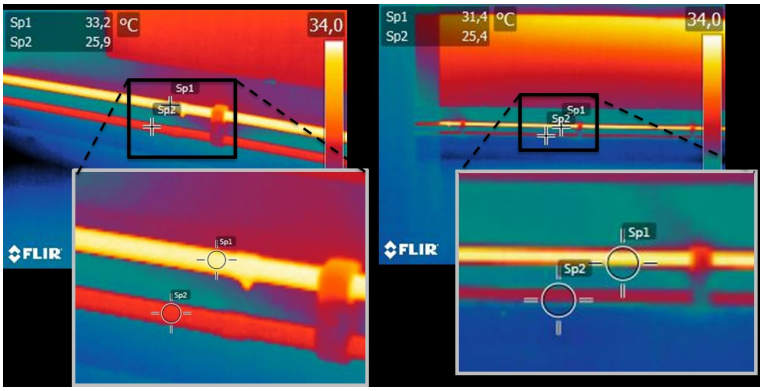

Figure 34.7 Supply and return lines from radiators in an open-plan office. The left image was taken from a distance of 1 m: the measurement spot is filled and the temperature measurement is correct. The right image was taken from a distance of 3 m: the measurement spot is not completely filled and the measured temperature values are incorrect (31.4 and 24.4°C (88.5 and 75.9°F) instead of 33.2 and 25.9°C (91.8 and 78.6° F)).

34.5 The changeables—image optimization and temperature measurement

34.5.1 Level and span

After choosing the appropriate temperature range, you can adjust the contrast and brightness of the thermal image by changing the temperature intervals displayed. In manual mode, the false colors available in the palette can be assigned to the temperatures of the object of interest. This process is often referred to as “thermal tuning.” In automatic mode, the camera selects the coldest and warmest apparent temperatures in the image as the upper and lower limits of the temperature interval currently displayed.

A good or problem-specific scaling of the thermal image is an important step in the interpretation of the image, and is, unfortunately, often underestimated (see Figure 34.8).

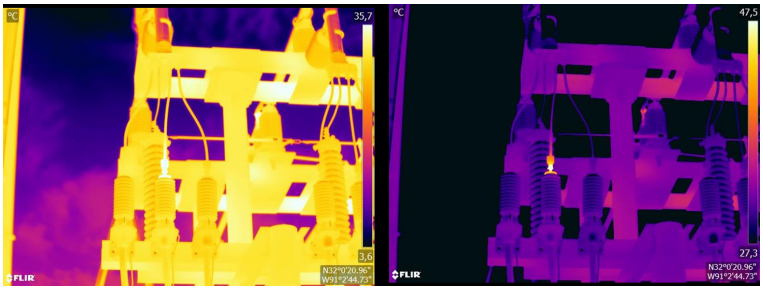

Figure 34.8 A thermal image in automatic mode (left) and in manual model (right). The adjusted temperature interval increases the contrast in the image and makes the faults clear.

34.5.2 Palettes and isotherms

Palettes represent intervals with the same apparent temperatures using different sets of colors. In other words, they translate specific radiation intensities into colors that are specific to a particular palette. Frequently used palettes include the gray, iron, and rainbow palettes (see Figure 34.9). Gray tones are particularly suited to resolving small geometric details but are less suited to displaying small differences in temperature. The iron palette is very intuitive and also easy to understand for those without much experience in thermography. It offers a good balance between geometric and thermal resolution. The rainbow palette is more colorful and alternates between light and dark colors. This results in

greater contrast, but this can lead to a noisy image for objects with different surfaces or many temperatures.

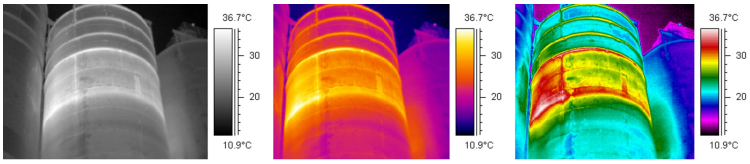

Figure 34.9 Gray, iron, and rainbow palettes (left to right).

The isotherm is a measuring function that displays a given interval of the same apparent temperature or radiation intensity in a color that is different from the palette. It allows you to emphasize temperature patterns in the image (see Figure 34.10).

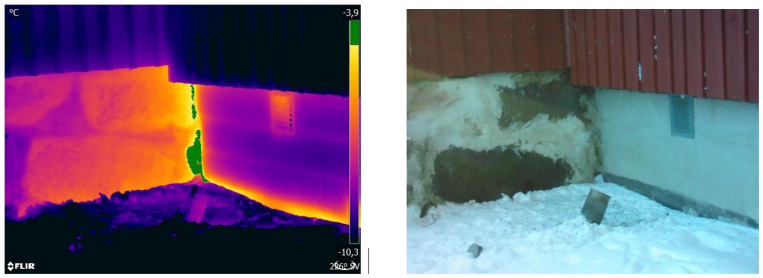

Figure 34.10 Foundation wall: connection between the old (left in image) and the new (right in image) parts of the building. The isotherm highlights an area of air leakage.

34.5.3 Object parameters

As we have seen, the appearance of thermal images is dependent on the thermographer's technique and choice of settings, and the look of saved radiometric images can be altered by editing. However, it is also possible to change the settings that are relevant for the calculation of temperatures. In practice, this means that the emissivity and reflected apparent temperature can be altered retrospectively. If you notice that these parameters have been set incorrectly or want to add more measurement spots, the temperature measurement values will be calculated or recalculated according to the changes (see Figure 34.11).

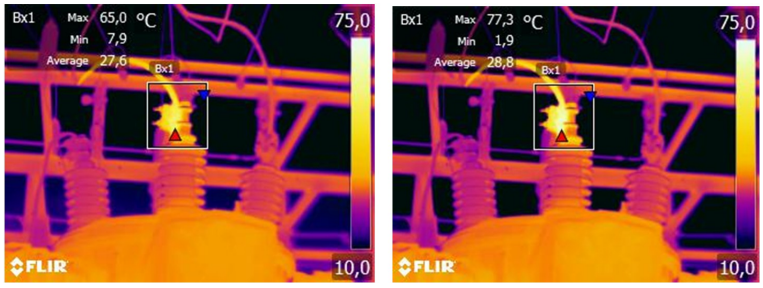

Figure 34.11 Change in emissivity for a saved image. The maximum temperature is 65.0°C (149°F) for ε = 0.95 in the left image and 77.3°C (171.1°F) for ε = 0.7 in the right image.

34.6 Taking images—practical tips

The following list includes some practical tips. However, note that this is not a comprehensive description of the thermal imaging procedure.

- Ensure that the camera is saving radiometric images.
- Choose an appropriate position from which to take images:

- Observe the radiative situation.
- Check that the object is clearly visible and displayed at an appropriate size and position.

- If you change the emissivity, monitor the temperature range and make sure that it remains appropriate.
- Focus.
- Use a tripod to minimize camera shake.
- Carry out thermal tuning.
- Take note of the object description, object size, actual distance, environmental conditions, and operating conditions.

It is easier to edit the thermal image when it is saved or “frozen” (in “Preview”). Also, since you don't have to do everything on site, you can leave dangerous zones immediately after taking the image. If possible, take a few more images than you need—including from different angles. This is preferable to taking too few! You can then choose the best image afterwards, at leisure.

34.7 Conclusion

Taking a good thermal image does not require any magic tricks—solid craft and sound work is all that is required. Many of the points mentioned may seem trivial and “old news,” particularly to amateur photographers. Of course, the equipment plays a role easier to ensure sharp images. Better, i.e. high-definition, cameras allow the fast localization of even small anomalies, and without focusing capabilities it is always difficult to capture a sharp image. However, high-end cameras are no guarantee of good images if used incorrectly. The basis for good, professional work is education and training in thermography, exchange of knowledge with other thermographers, and, of course, practical experience.

35 About calibration

35.1 Introduction

Calibration of a thermal camera is a prerequisite for temperature measurement. The calibration provides the relationship between the input signal and the physical quantity that the user wants to measure. However, despite its widespread and frequent use, the term “calibration” is often misunderstood and misused. Local and national differences as well as translation-related issues create additional confusion.

Unclear terminology can lead to difficulties in communication and erroneous translations, and subsequently to incorrect measurements due to misunderstandings and, in the worst case, even to lawsuits.

35.2 Definition—what is calibration?

The International Bureau of Weights and Measures[33] defines *calibration*[34] in the following way:

an operation that, under specified conditions, in a first step, establishes a relation between the quantity values with measurement uncertainties provided by measurement standards and corresponding indications with associated measurement uncertainties and, in a second step, uses this information to establish a relation for obtaining a measurement result from an indication.

The calibration itself may be expressed in different formats: this can be a statement, calibration function, calibration diagram[35], calibration curve[36], or calibration table.

Often, the first step alone in the above definition is perceived and referred to as being “calibration.” However, this is not (always) sufficient.

Considering the calibration procedure of a thermal camera, the first step establishes the relation between emitted radiation (the quantity value) and the electrical output signal (the indication). This first step of the calibration procedure consists of obtaining a homogeneous (or uniform) response when the camera is placed in front of an extended source of radiation.

As we know the temperature of the reference source emitting the radiation, in the second step the obtained output signal (the indication) can be related to the reference source’s temperature (measurement result). The second step includes drift measurement and compensation.

To be correct, calibration of a thermal camera is, strictly, not expressed through temperature. Thermal cameras are sensitive to infrared radiation: therefore, at first you obtain a radiance correspondence, then a relationship between radiance and temperature. For bolometer cameras used by non-R&D customers, radiance is not expressed: only the temperature is provided.

35.3 Camera calibration at FLIR Systems

Without calibration, an infrared camera would not be able to measure either radiance or temperature. At FLIR Systems, the calibration of uncooled microbolometer cameras with a

33. http://www.bipm.org/en/about-us/ [Retrieved 2017-01-31.]
34. http://jcgm.bipm.org/vim/en/2.39.html [Retrieved 2017-01-31.]
35. http://jcgm.bipm.org/vim/en/4.30.html [Retrieved 2017-01-31.]
36. http://jcgm.bipm.org/vim/en/4.31.html [Retrieved 2017-01-31.]

measurement capability is carried out during both production and service. Cooled cameras with photon detectors are often calibrated by the user with special software. With this type of software, in theory, common handheld uncooled thermal cameras could be calibrated by the user too. However, as this software is not suitable for reporting purposes, most users do not have it. Non-measuring devices that are used for imaging only do not need temperature calibration. Sometimes this is also reflected in camera terminology when talking about infrared or thermal imaging cameras compared with thermography cameras, where the latter are the measuring devices.

The calibration information, no matter if the calibration is done by FLIR Systems or the user, is stored in calibration curves, which are expressed by mathematical functions. As radiation intensity changes with both temperature and the distance between the object and the camera, different curves are generated for different temperature ranges and exchangeable lenses.

35.4 The differences between a calibration performed by a user and that performed directly at FLIR Systems

First, the reference sources that FLIR Systems uses are themselves calibrated and traceable. This means, at each FLIR Systems site performing calibration, that the sources are controlled by an independent national authority. The camera calibration certificate is confirmation of this. It is proof that not only has the calibration been performed by FLIR Systems but that it has also been carried out using calibrated references. Some users own or have access to accredited reference sources, but they are very few in number.

Second, there is a technical difference. When performing a user calibration, the result is often (but not always) not drift compensated. This means that the values do not take into account a possible change in the camera's output when the camera's internal temperature varies. This yields a larger uncertainty. Drift compensation uses data obtained in climate-controlled chambers. All FLIR Systems cameras are drift compensated when they are first delivered to the customer and when they are recalibrated by FLIR Systems service departments.

35.5 Calibration, verification and adjustment

A common misconception is to confuse *calibration* with *verification* or *adjustment*. Indeed, calibration is a prerequisite for *verification*, which provides confirmation that specified requirements are met. Verification provides objective evidence that a given item fulfills specified requirements. To obtain the verification, defined temperatures (emitted radiation) of calibrated and traceable reference sources are measured. The measurement results, including the deviation, are noted in a table. The verification certificate states that these measurement results meet specified requirements. Sometimes, companies or organizations offer and market this verification certificate as a "calibration certificate."

Proper verification—and by extension calibration and/or recalibration—can only be achieved when a validated protocol is respected. The process is more than placing the camera in front of blackbodies and checking if the camera output (as temperature, for instance) corresponds to the original calibration table. It is often forgotten that a camera is not sensitive to temperature but to radiation. Furthermore, a camera is an *imaging* system, not just a single sensor. Consequently, if the optical configuration allowing the camera to "collect" radiance is poor or misaligned, then the "verification" (or calibration or recalibration) is worthless.

For instance, one has to ensure that the distance between the blackbody and the camera as well as the diameter of the blackbody cavity are chosen so as to reduce stray radiation and the size-of-source effect.

To summarize: a validated protocol must comply with the physical laws for *radiance*, and not only those for temperature.

Calibration is also a prerequisite for *adjustment*, which is the set of operations carried out on a measuring system such that the system provides prescribed indications corresponding to given values of quantities to be measured, typically obtained from measurement standards. Simplified, adjustment is a manipulation that results in instruments that measure correctly within their specifications. In everyday language, the term “calibration” is widely used instead of “adjustment” for measuring devices.

35.6 Non-uniformity correction

When the thermal camera displays ”Calibrating…” it is adjusting for the deviation in response of each individual detector element (pixel). In thermography, this is called a ”non-uniformity correction” (NUC). It is an offset update, and the gain remains unchanged.

The European standard EN 16714-3, Non-destructive Testing—Thermographic Testing—Part 3: Terms and Definitions, defines an NUC as “Image correction carried out by the camera software to compensate for different sensitivities of detector elements and other optical and geometrical disturbances.”

During the NUC (the offset update), a shutter (internal flag) is placed in the optical path, and all the detector elements are exposed to the same amount of radiation originating from the shutter. Therefore, in an ideal situation, they should all give the same output signal. However, each individual element has its own response, so the output is not uniform. This deviation from the ideal result is calculated and used to mathematically perform an image correction, which is essentially a correction of the displayed radiation signal. Some cameras do not have an internal flag. In this case, the offset update must be performed manually using special software and an external uniform source of radiation.

An NUC is performed, for example, at start-up, when changing a measurement range, or when the environment temperature changes. Some cameras also allow the user to trigger it manually. This is useful when you have to perform a critical measurement with as little image disturbance as possible.

35.7 Thermal image adjustment (thermal tuning)

Some people use the term “image calibration” when adjusting the thermal contrast and brightness in the image to enhance specific details. During this operation, the temperature interval is set in such a way that all available colors are used to show only (or mainly) the temperatures in the region of interest. The correct term for this manipulation is “thermal image adjustment” or “thermal tuning”, or, in some languages, “thermal image optimization.” You must be in manual mode to undertake this, otherwise the camera will set the lower and upper limits of the displayed temperature interval automatically to the coldest and hottest temperatures in the scene.

36 History of infrared technology

Before the year 1800, the existence of the infrared portion of the electromagnetic spectrum wasn't even suspected. The original significance of the infrared spectrum, or simply ‘the infrared’ as it is often called, as a form of heat radiation is perhaps less obvious today than it was at the time of its discovery by Herschel in 1800.

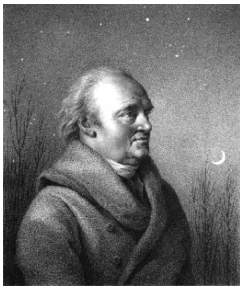

Figure 36.1 Sir William Herschel (1738–1822)

The discovery was made accidentally during the search for a new optical material. Sir William Herschel – Royal Astronomer to King George III of England, and already famous for his discovery of the planet Uranus – was searching for an optical filter material to reduce the brightness of the sun’s image in telescopes during solar observations. While testing different samples of colored glass which gave similar reductions in brightness he was intrigued to find that some of the samples passed very little of the sun’s heat, while others passed so much heat that he risked eye damage after only a few seconds’ observation.

Herschel was soon convinced of the necessity of setting up a systematic experiment, with the objective of finding a single material that would give the desired reduction in brightness as well as the maximum reduction in heat. He began the experiment by actually repeating Newton’s prism experiment, but looking for the heating effect rather than the visual distribution of intensity in the spectrum. He first blackened the bulb of a sensitive mercury-in-glass thermometer with ink, and with this as his radiation detector he proceeded to test the heating effect of the various colors of the spectrum formed on the top of a table by passing sunlight through a glass prism. Other thermometers, placed outside the sun’s rays, served as controls.

As the blackened thermometer was moved slowly along the colors of the spectrum, the temperature readings showed a steady increase from the violet end to the red end. This was not entirely unexpected, since the Italian researcher, Landriani, in a similar experiment in 1777 had observed much the same effect. It was Herschel, however, who was the first to recognize that there must be a point where the heating effect reaches a maximum, and that measurements confined to the visible portion of the spectrum failed to locate this point.

Figure 36.2 Marsilio Landriani (1746–1815)

Moving the thermometer into the dark region beyond the red end of the spectrum, Herschel confirmed that the heating continued to increase. The maximum point, when he found it, lay well beyond the red end – in what is known today as the ‘infrared wavelengths’.

When Herschel revealed his discovery, he referred to this new portion of the electromagnetic spectrum as the ‘thermometrical spectrum’. The radiation itself he sometimes referred to as ‘dark heat’, or simply ‘the invisible rays’. Ironically, and contrary to popular opinion, it wasn't Herschel who originated the term ‘infrared’. The word only began to appear in print around 75 years later, and it is still unclear who should receive credit as the originator.

Herschel’s use of glass in the prism of his original experiment led to some early controversies with his contemporaries about the actual existence of the infrared wavelengths. Different investigators, in attempting to confirm his work, used various types of glass indiscriminately, having different transparencies in the infrared. Through his later experiments, Herschel was aware of the limited transparency of glass to the newly-discovered thermal radiation, and he was forced to conclude that optics for the infrared would probably be doomed to the use of reflective elements exclusively (i.e. plane and curved mirrors). Fortunately, this proved to be true only until 1830, when the Italian investigator, Melloni, made his great discovery that naturally occurring rock salt (NaCl) – which was available in large enough natural crystals to be made into lenses and prisms – is remarkably transparent to the infrared. The result was that rock salt became the principal infrared optical material, and remained so for the next hundred years, until the art of synthetic crystal growing was mastered in the 1930’s.

Figure 36.3 Macedonio Melloni (1798–1854)

Thermometers, as radiation detectors, remained unchallenged until 1829, the year Nobili invented the thermocouple. (Herschel’s own thermometer could be read to 0.2 °C (0.036 ° F), and later models were able to be read to 0.05 °C (0.09 °F)). Then a breakthrough occurred; Melloni connected a number of thermocouples in series to form the first thermopile. The new device was at least 40 times as sensitive as the best thermometer of the day for detecting heat radiation – capable of detecting the heat from a person standing three meters away.

The first so-called ‘heat-picture’ became possible in 1840, the result of work by Sir John Herschel, son of the discoverer of the infrared and a famous astronomer in his own right. Based upon the differential evaporation of a thin film of oil when exposed to a heat pattern focused upon it, the thermal image could be seen by reflected light where the interference effects of the oil film made the image visible to the eye. Sir John also managed to obtain a primitive record of the thermal image on paper, which he called a ‘thermograph’.

Figure 36.4 Samuel P. Langley (1834–1906)

The improvement of infrared-detector sensitivity progressed slowly. Another major breakthrough, made by Langley in 1880, was the invention of the bolometer. This consisted of a thin blackened strip of platinum connected in one arm of a Wheatstone bridge circuit upon which the infrared radiation was focused and to which a sensitive galvanometer responded. This instrument is said to have been able to detect the heat from a cow at a distance of 400 meters.

An English scientist, Sir James Dewar, first introduced the use of liquefied gases as cooling agents (such as liquid nitrogen with a temperature of –196°C (–320.8°F)) in low temperature research. In 1892 he invented a unique vacuum insulating container in which it is possible to store liquefied gases for entire days. The common ‘thermos bottle’, used for storing hot and cold drinks, is based upon his invention.

Between the years 1900 and 1920, the inventors of the world ‘discovered’ the infrared. Many patents were issued for devices to detect personnel, artillery, aircraft, ships – and even icebergs. The first operating systems, in the modern sense, began to be developed during the 1914–18 war, when both sides had research programs devoted to the military exploitation of the infrared. These programs included experimental systems for enemy intrusion/detection, remote temperature sensing, secure communications, and ‘flying torpedo’ guidance. An infrared search system tested during this period was able to detect an approaching airplane at a distance of 1.5 km (0.94 miles), or a person more than 300 meters (984 ft.) away.

The most sensitive systems up to this time were all based upon variations of the bolometer idea, but the period between the two wars saw the development of two revolutionary new infrared detectors: the image converter and the photon detector. At first, the image converter received the greatest attention by the military, because it enabled an observer for the first time in history to literally ‘see in the dark’. However, the sensitivity of the image converter was limited to the near infrared wavelengths, and the most interesting military targets (i.e. enemy soldiers) had to be illuminated by infrared search beams. Since this involved the risk of giving away the observer’s position to a similarly-equipped enemy observer, it is understandable that military interest in the image converter eventually faded.

The tactical military disadvantages of so-called 'active’ (i.e. search beam-equipped) thermal imaging systems provided impetus following the 1939–45 war for extensive secret military infrared-research programs into the possibilities of developing ‘passive’ (no search beam) systems around the extremely sensitive photon detector. During this period, military secrecy regulations completely prevented disclosure of the status of infrared-imaging technology. This secrecy only began to be lifted in the middle of the 1950’s, and from that time adequate thermal-imaging devices finally began to be available to civilian science and industry.

37 Theory of thermography

37.1 Introduction

The subjects of infrared radiation and the related technique of thermography are still new to many who will use an infrared camera. In this section the theory behind thermography will be given.

37.2 The electromagnetic spectrum

The electromagnetic spectrum is divided arbitrarily into a number of wavelength regions, called *bands*, distinguished by the methods used to produce and detect the radiation. There is no fundamental difference between radiation in the different bands of the electromagnetic spectrum. They are all governed by the same laws and the only differences are those due to differences in wavelength.

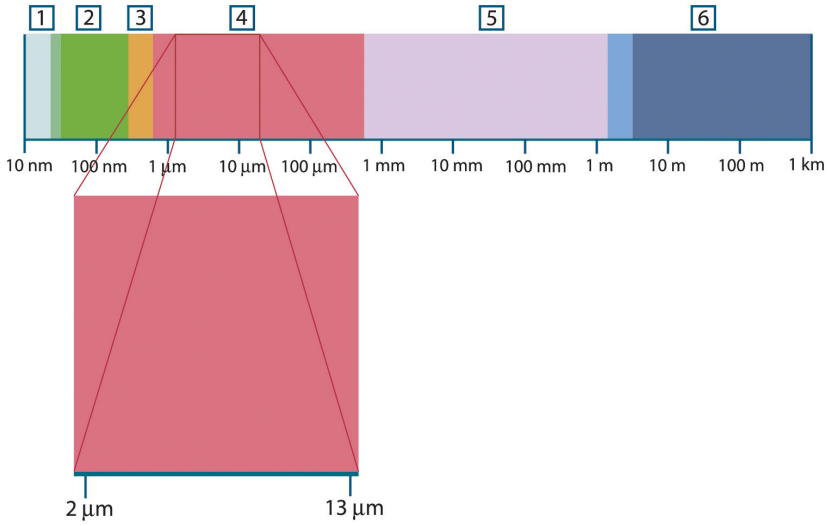

Figure 37.1 The electromagnetic spectrum. 1: X-ray; 2: UV; 3: Visible; 4: IR; 5: Microwaves; 6: Radiowaves.

Thermography makes use of the infrared spectral band. At the short-wavelength end the boundary lies at the limit of visual perception, in the deep red. At the long-wavelength end it merges with the microwave radio wavelengths, in the millimeter range.

The infrared band is often further subdivided into four smaller bands, the boundaries of which are also arbitrarily chosen. They include: the *near infrared* (0.75–3 µm), the *middle infrared* (3–6 µm), the *far infrared* (6–15 µm) and the *extreme infrared* (15–100 µm). Although the wavelengths are given in µm (micrometers), other units are often still used to measure wavelength in this spectral region, *e.g.* nanometer (nm) and Ångström (Å).

The relationships between the different wavelength measurements is:

$$10\ 000\ \text{Å} = 1\ 000\ \text{nm} = 1\ \mu = 1\ \mu\text{m}$$

37.3 Blackbody radiation

A blackbody is defined as an object which absorbs all radiation that impinges on it at any wavelength. The apparent misnomer *black* relating to an object emitting radiation is explained by Kirchhoff's Law (after *Gustav Robert Kirchhoff*, 1824–1887), which states that a body capable of absorbing all radiation at any wavelength is equally capable in the emission of radiation.

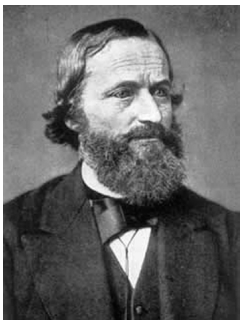

Figure 37.2 Gustav Robert Kirchhoff (1824–1887)

The construction of a blackbody source is, in principle, very simple. The radiation characteristics of an aperture in an isotherm cavity made of an opaque absorbing material represents almost exactly the properties of a blackbody. A practical application of the principle to the construction of a perfect absorber of radiation consists of a box that is light tight except for an aperture in one of the sides. Any radiation which then enters the hole is scattered and absorbed by repeated reflections so only an infinitesimal fraction can possibly escape. The blackness which is obtained at the aperture is nearly equal to a blackbody and almost perfect for all wavelengths.

By providing such an isothermal cavity with a suitable heater it becomes what is termed a *cavity radiator*. An isothermal cavity heated to a uniform temperature generates blackbody radiation, the characteristics of which are determined solely by the temperature of the cavity. Such cavity radiators are commonly used as sources of radiation in temperature reference standards in the laboratory for calibrating thermographic instruments, such as a FLIR Systems camera for example.

If the temperature of blackbody radiation increases to more than 525°C (977°F), the source begins to be visible so that it appears to the eye no longer black. This is the incipient red heat temperature of the radiator, which then becomes orange or yellow as the temperature increases further. In fact, the definition of the so-called *color temperature* of an object is the temperature to which a blackbody would have to be heated to have the same appearance.

Now consider three expressions that describe the radiation emitted from a blackbody.

37.3.1 Planck's law

Figure 37.3 Max Planck (1858–1947)

Max Planck (1858–1947) was able to describe the spectral distribution of the radiation from a blackbody by means of the following formula:

$$W_{\lambda b} = \frac{2\pi hc^2}{\lambda^5\left(e^{hc/\lambda kT} - 1\right)} \times 10^{-6}[Watt\,/\,m^2, \mu m]$$

where:

$W_{\lambda b}$	Blackbody spectral radiant emittance at wavelength λ.
c	Velocity of light = 3×10^8 m/s
h	Planck's constant = 6.6×10^{-34} Joule sec.
k	Boltzmann's constant = 1.4×10^{-23} Joule/K.
T	Absolute temperature (K) of a blackbody.
λ	Wavelength (µm).

Note The factor 10^{-6} is used since spectral emittance in the curves is expressed in Watt/m², µm.

Planck's formula, when plotted graphically for various temperatures, produces a family of curves. Following any particular Planck curve, the spectral emittance is zero at λ = 0, then increases rapidly to a maximum at a wavelength λ_{max} and after passing it approaches zero again at very long wavelengths. The higher the temperature, the shorter the wavelength at which maximum occurs.

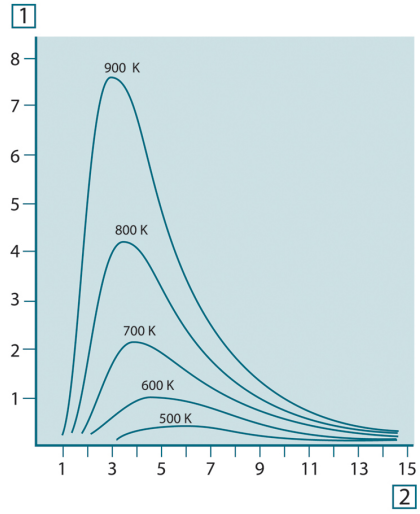

Figure 37.4 Blackbody spectral radiant emittance according to Planck's law, plotted for various absolute temperatures. 1: Spectral radiant emittance (W/cm^2 × 10^3(µm)); 2: Wavelength (µm)

37.3.2 Wien's displacement law

By differentiating Planck's formula with respect to λ, and finding the maximum, we have:

$$\lambda_{\max} = \frac{2898}{T}[\mu m]$$

This is Wien's formula (after *Wilhelm Wien*, 1864–1928), which expresses mathematically the common observation that colors vary from red to orange or yellow as the temperature of a thermal radiator increases. The wavelength of the color is the same as the wavelength calculated for λ_{max}. A good approximation of the value of λ_{max} for a given blackbody temperature is obtained by applying the rule-of-thumb 3 000/T µm. Thus, a very hot star such as Sirius (11 000 K), emitting bluish-white light, radiates with the peak of spectral radiant emittance occurring within the invisible ultraviolet spectrum, at wavelength 0.27 µm.

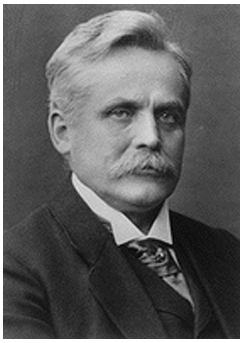

Figure 37.5 Wilhelm Wien (1864–1928)

The sun (approx. 6 000 K) emits yellow light, peaking at about 0.5 µm in the middle of the visible light spectrum.

At room temperature (300 K) the peak of radiant emittance lies at 9.7 µm, in the far infrared, while at the temperature of liquid nitrogen (77 K) the maximum of the almost insignificant amount of radiant emittance occurs at 38 µm, in the extreme infrared wavelengths.

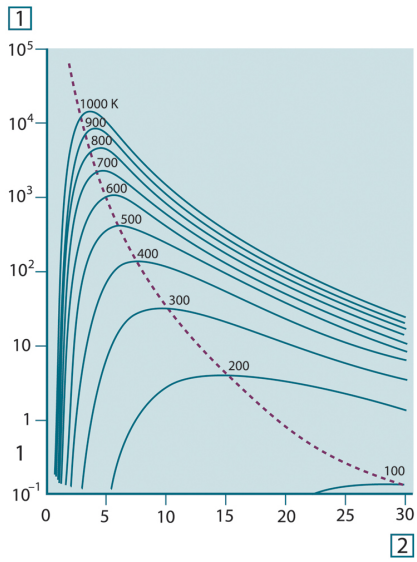

Figure 37.6 Planckian curves plotted on semi-log scales from 100 K to 1000 K. The dotted line represents the locus of maximum radiant emittance at each temperature as described by Wien's displacement law. 1: Spectral radiant emittance (W/cm² (µm)); 2: Wavelength (µm).

37.3.3 Stefan-Boltzmann's law

By integrating Planck's formula from λ = 0 to λ = ∞, we obtain the total radiant emittance (W_b) of a blackbody:

$$W_b = \sigma T^4 \ [\mathrm{Watt/m^2}]$$

This is the Stefan-Boltzmann formula (after *Josef Stefan*, 1835–1893, and *Ludwig Boltzmann*, 1844–1906), which states that the total emissive power of a blackbody is proportional to the fourth power of its absolute temperature. Graphically, W_b represents the area below the Planck curve for a particular temperature. It can be shown that the radiant emittance in the interval λ = 0 to λ_{max} is only 25% of the total, which represents about the amount of the sun's radiation which lies inside the visible light spectrum.

Figure 37.7 Josef Stefan (1835–1893), and Ludwig Boltzmann (1844–1906)

Using the Stefan-Boltzmann formula to calculate the power radiated by the human body, at a temperature of 300 K and an external surface area of approx. 2 m^2, we obtain 1 kW. This power loss could not be sustained if it were not for the compensating absorption of radiation from surrounding surfaces, at room temperatures which do not vary too drastically from the temperature of the body – or, of course, the addition of clothing.

37.3.4 Non-blackbody emitters

So far, only blackbody radiators and blackbody radiation have been discussed. However, real objects almost never comply with these laws over an extended wavelength region – although they may approach the blackbody behavior in certain spectral intervals. For example, a certain type of white paint may appear perfectly *white* in the visible light spectrum, but becomes distinctly *gray* at about 2 µm, and beyond 3 µm it is almost *black*.

There are three processes which can occur that prevent a real object from acting like a blackbody: a fraction of the incident radiation α may be absorbed, a fraction ρ may be reflected, and a fraction τ may be transmitted. Since all of these factors are more or less wavelength dependent, the subscript λ is used to imply the spectral dependence of their definitions. Thus:

- The spectral absorptance α_λ= the ratio of the spectral radiant power absorbed by an object to that incident upon it.
- The spectral reflectance ρ_λ = the ratio of the spectral radiant power reflected by an object to that incident upon it.
- The spectral transmittance τ_λ = the ratio of the spectral radiant power transmitted through an object to that incident upon it.

The sum of these three factors must always add up to the whole at any wavelength, so we have the relation:

$$\alpha_\lambda + \rho_\lambda + \tau_\lambda = 1$$

For opaque materials $\tau_\lambda = 0$ and the relation simplifies to:

$$\varepsilon_\lambda + \rho_\lambda = 1$$

Another factor, called the emissivity, is required to describe the fraction ε of the radiant emittance of a blackbody produced by an object at a specific temperature. Thus, we have the definition:

The spectral emissivity ε_λ= the ratio of the spectral radiant power from an object to that from a blackbody at the same temperature and wavelength.

Expressed mathematically, this can be written as the ratio of the spectral emittance of the object to that of a blackbody as follows:

$$\varepsilon_\lambda = \frac{W_{\lambda o}}{W_{\lambda b}}$$

Generally speaking, there are three types of radiation source, distinguished by the ways in which the spectral emittance of each varies with wavelength.

- A blackbody, for which $\varepsilon_\lambda = \varepsilon = 1$
- A graybody, for which $\varepsilon_\lambda = \varepsilon$ = constant less than 1
- A selective radiator, for which ε varies with wavelength

According to Kirchhoff's law, for any material the spectral emissivity and spectral absorptance of a body are equal at any specified temperature and wavelength. That is:

$$\varepsilon_\lambda = \alpha_\lambda$$

From this we obtain, for an opaque material (since $\alpha_\lambda + \rho_\lambda = 1$):

$$\varepsilon_\lambda + \rho_\lambda = 1$$

For highly polished materials ε_λ approaches zero, so that for a perfectly reflecting material (*i.e.* a perfect mirror) we have:

$$\rho_\lambda = 1$$

For a graybody radiator, the Stefan-Boltzmann formula becomes:

$$W = \varepsilon \sigma T^4 \, [\mathrm{Watt/m^2}]$$

This states that the total emissive power of a graybody is the same as a blackbody at the same temperature reduced in proportion to the value of ε from the graybody.

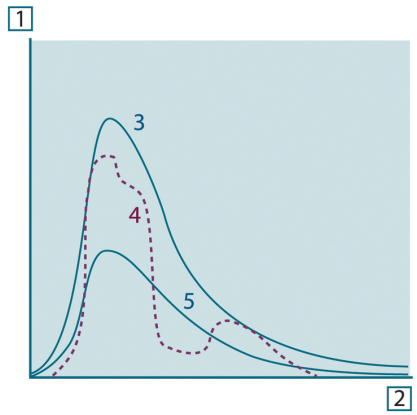

Figure 37.8 Spectral radiant emittance of three types of radiators. 1: Spectral radiant emittance; 2: Wavelength; 3: Blackbody; 4: Selective radiator; 5: Graybody.

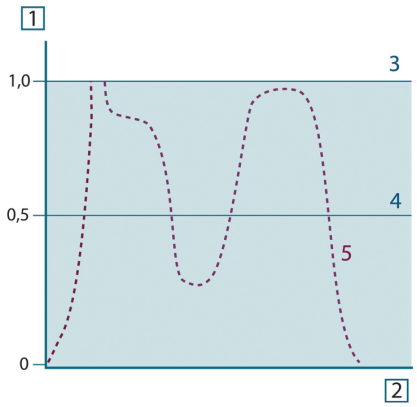

Figure 37.9 Spectral emissivity of three types of radiators. 1: Spectral emissivity; 2: Wavelength; 3: Blackbody; 4: Graybody; 5: Selective radiator.

37.4 Infrared semi-transparent materials

Consider now a non-metallic, semi-transparent body – let us say, in the form of a thick flat plate of plastic material. When the plate is heated, radiation generated within its volume must work its way toward the surfaces through the material in which it is partially absorbed. Moreover, when it arrives at the surface, some of it is reflected back into the interior. The back-reflected radiation is again partially absorbed, but some of it arrives at the other surface, through which most of it escapes; part of it is reflected back again. Although the progressive reflections become weaker and weaker they must all be added up when the total emittance of the plate is sought. When the resulting geometrical series is summed, the effective emissivity of a semi-transparent plate is obtained as:

$$\varepsilon_\lambda = \frac{(1-\rho_\lambda)(1-\tau_\lambda)}{1-\rho_\lambda\tau_\lambda}$$

When the plate becomes opaque this formula is reduced to the single formula:

$$\varepsilon_\lambda = 1-\rho_\lambda$$

This last relation is a particularly convenient one, because it is often easier to measure reflectance than to measure emissivity directly.

38 The measurement formula

As already mentioned, when viewing an object, the camera receives radiation not only from the object itself. It also collects radiation from the surroundings reflected via the object surface. Both these radiation contributions become attenuated to some extent by the atmosphere in the measurement path. To this comes a third radiation contribution from the atmosphere itself.

This description of the measurement situation, as illustrated in the figure below, is so far a fairly true description of the real conditions. What has been neglected could for instance be sun light scattering in the atmosphere or stray radiation from intense radiation sources outside the field of view. Such disturbances are difficult to quantify, however, in most cases they are fortunately small enough to be neglected. In case they are not negligible, the measurement configuration is likely to be such that the risk for disturbance is obvious, at least to a trained operator. It is then his responsibility to modify the measurement situation to avoid the disturbance e.g. by changing the viewing direction, shielding off intense radiation sources etc.

Accepting the description above, we can use the figure below to derive a formula for the calculation of the object temperature from the calibrated camera output.

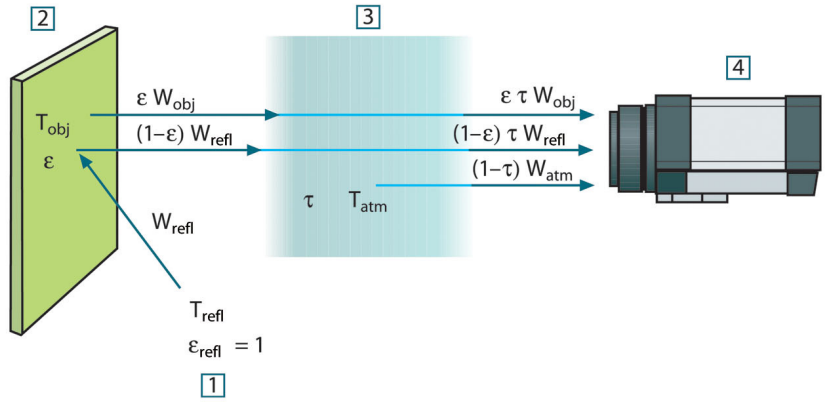

Figure 38.1 A schematic representation of the general thermographic measurement situation.1: Surroundings; 2: Object; 3: Atmosphere; 4: Camera

Assume that the received radiation power W from a blackbody source of temperature T_{source} on short distance generates a camera output signal U_{source} that is proportional to the power input (power linear camera). We can then write (Equation 1):

$$U_{source} = CW(T_{source})$$

or, with simplified notation:

$$U_{source} = CW_{source}$$

where C is a constant.

Should the source be a graybody with emittance ε, the received radiation would consequently be εW_{source}.

We are now ready to write the three collected radiation power terms:

1. *Emission from the object* = $\varepsilon\tau W_{obj}$, where ε is the emittance of the object and τ is the transmittance of the atmosphere. The object temperature is T_{obj}.

2. *Reflected emission from ambient sources* = $(1 - \varepsilon)\tau W_{refl}$, where $(1 - \varepsilon)$ is the reflectance of the object. The ambient sources have the temperature T_{refl}.
   It has here been assumed that the temperature T_{refl} is the same for all emitting surfaces within the halfsphere seen from a point on the object surface. This is of course sometimes a simplification of the true situation. It is, however, a necessary simplification in order to derive a workable formula, and T_{refl} can – at least theoretically – be given a value that represents an efficient temperature of a complex surrounding.

   Note also that we have assumed that the emittance for the surroundings = 1. This is correct in accordance with Kirchhoff's law: All radiation impinging on the surrounding surfaces will eventually be absorbed by the same surfaces. Thus the emittance = 1. (Note though that the latest discussion requires the complete sphere around the object to be considered.)
3. *Emission from the atmosphere* = $(1 - \tau)\tau W_{atm}$, where $(1 - \tau)$ is the emittance of the atmosphere. The temperature of the atmosphere is T_{atm}.

The total received radiation power can now be written (Equation 2):

$$W_{tot} = \varepsilon\tau W_{obj} + (1-\varepsilon)\tau W_{refl} + (1-\tau)W_{atm}$$

We multiply each term by the constant C of Equation 1 and replace the CW products by the corresponding U according to the same equation, and get (Equation 3):

$$U_{tot} = \varepsilon\tau U_{obj} + (1-\varepsilon)\tau U_{refl} + (1-\tau)U_{atm}$$

Solve Equation 3 for U_{obj} (Equation 4):

$$U_{obj} = \frac{1}{\varepsilon\tau}U_{tot} - \frac{1-\varepsilon}{\varepsilon}U_{refl} - \frac{1-\tau}{\varepsilon\tau}U_{atm}$$

This is the general measurement formula used in all the FLIR Systems thermographic equipment. The voltages of the formula are:

Table 38.1 Voltages

U_{obj}	Calculated camera output voltage for a blackbody of temperature T_{obj} i.e. a voltage that can be directly converted into true requested object temperature.
U_{tot}	Measured camera output voltage for the actual case.
U_{refl}	Theoretical camera output voltage for a blackbody of temperature T_{refl} according to the calibration.
U_{atm}	Theoretical camera output voltage for a blackbody of temperature T_{atm} according to the calibration.

The operator has to supply a number of parameter values for the calculation:

- the object emittance ε,
- the relative humidity,
- T_{atm}
- object distance (D_{obj})
- the (effective) temperature of the object surroundings, or the reflected ambient temperature T_{refl}, and
- the temperature of the atmosphere T_{atm}

This task could sometimes be a heavy burden for the operator since there are normally no easy ways to find accurate values of emittance and atmospheric transmittance for the

actual case. The two temperatures are normally less of a problem provided the surroundings do not contain large and intense radiation sources.

A natural question in this connection is: How important is it to know the right values of these parameters? It could though be of interest to get a feeling for this problem already here by looking into some different measurement cases and compare the relative magnitudes of the three radiation terms. This will give indications about when it is important to use correct values of which parameters.

The figures below illustrates the relative magnitudes of the three radiation contributions for three different object temperatures, two emittances, and two spectral ranges: SW and LW. Remaining parameters have the following fixed values:

- $\tau = 0.88$
- $T_{refl} = +20°C$ (+68°F)
- $T_{atm} = +20°C$ (+68°F)

It is obvious that measurement of low object temperatures are more critical than measuring high temperatures since the ‘disturbing’ radiation sources are relatively much stronger in the first case. Should also the object emittance be low, the situation would be still more difficult.

We have finally to answer a question about the importance of being allowed to use the calibration curve above the highest calibration point, what we call extrapolation. Imagine that we in a certain case measure $U_{tot} = 4.5$ volts. The highest calibration point for the camera was in the order of 4.1 volts, a value unknown to the operator. Thus, even if the object happened to be a blackbody, i.e. $U_{obj} = U_{tot}$, we are actually performing extrapolation of the calibration curve when converting 4.5 volts into temperature.

Let us now assume that the object is not black, it has an emittance of 0.75, and the transmittance is 0.92. We also assume that the two second terms of Equation 4 amount to 0.5 volts together. Computation of U_{obj} by means of Equation 4 then results in $U_{obj} = 4.5 / 0.75 / 0.92 – 0.5 = 6.0$. This is a rather extreme extrapolation, particularly when considering that the video amplifier might limit the output to 5 volts! Note, though, that the application of the calibration curve is a theoretical procedure where no electronic or other limitations exist. We trust that if there had been no signal limitations in the camera, and if it had been calibrated far beyond 5 volts, the resulting curve would have been very much the same as our real curve extrapolated beyond 4.1 volts, provided the calibration algorithm is based on radiation physics, like the FLIR Systems algorithm. Of course there must be a limit to such extrapolations.

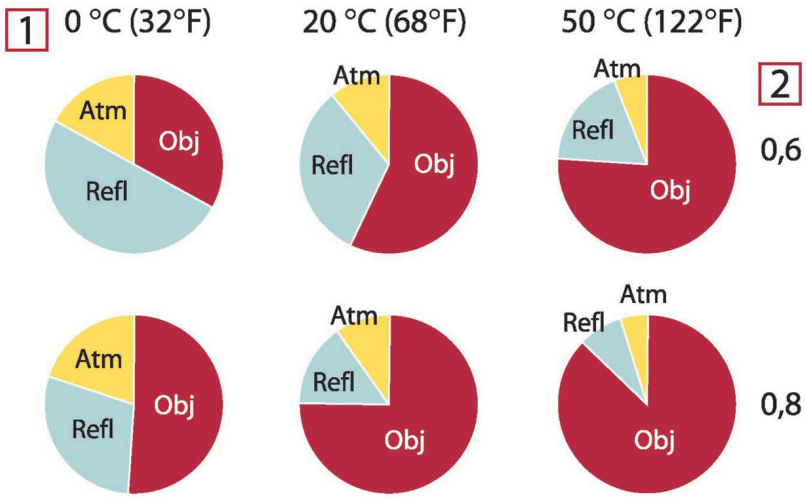

Figure 38.2 Relative magnitudes of radiation sources under varying measurement conditions (SW camera). 1: Object temperature; 2: Emittance; Obj: Object radiation; Refl: Reflected radiation; Atm: atmosphere radiation. Fixed parameters: $\tau = 0.88$; $T_{refl} = 20°C$ (+68°F); $T_{atm} = 20°C$ (+68°F).

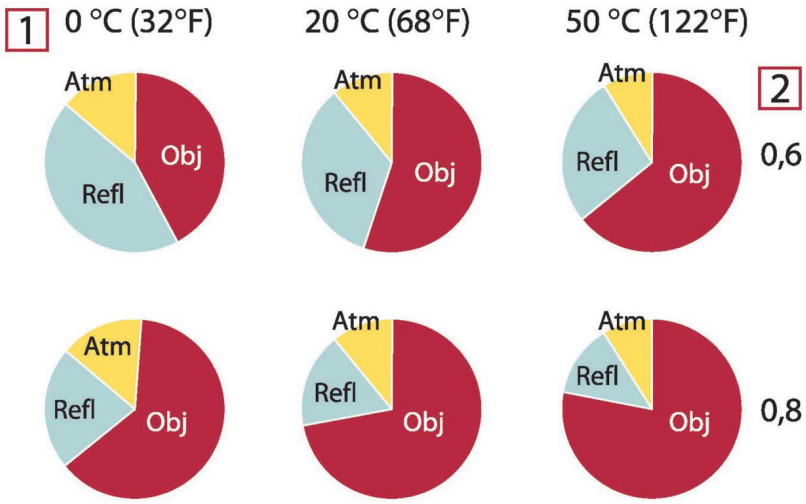

Figure 38.3 Relative magnitudes of radiation sources under varying measurement conditions (LW camera). 1: Object temperature; 2: Emittance; Obj: Object radiation; Refl: Reflected radiation; Atm: atmosphere radiation. Fixed parameters: $\tau = 0.88$; $T_{refl} = 20°C$ (+68°F); $T_{atm} = 20°C$ (+68°F).

39 Emissivity tables

This section presents a compilation of emissivity data from the infrared literature and measurements made by FLIR Systems.

39.1 References

1. Mikaél A. Bramson: *Infrared Radiation, A Handbook for Applications*, Plenum press, N. Y.
2. William L. Wolfe, George J. Zissis: *The Infrared Handbook*, Office of Naval Research, Department of Navy, Washington, D.C.
3. Madding, R. P.: *Thermographic Instruments and systems*. Madison, Wisconsin: University of Wisconsin – Extension, Department of Engineering and Applied Science.
4. William L. Wolfe: *Handbook of Military Infrared Technology*, Office of Naval Research, Department of Navy, Washington, D.C.
5. Jones, Smith, Probert: *External thermography of buildings...,* Proc. of the Society of Photo-Optical Instrumentation Engineers, vol.110, Industrial and Civil Applications of Infrared Technology, June 1977 London.
6. Paljak, Pettersson: *Thermography of Buildings*, Swedish Building Research Institute, Stockholm 1972.
7. Vlcek, J: *Determination of emissivity with imaging radiometers and some emissivities at $\lambda = 5$ µm.* Photogrammetric Engineering and Remote Sensing.
8. Kern: *Evaluation of infrared emission of clouds and ground as measured by weather satellites*, Defence Documentation Center, AD 617 417.
9. Öhman, Claes: *Emittansmätningar med AGEMA E-Box*. Teknisk rapport, AGEMA 1999. (Emittance measurements using AGEMA E-Box. Technical report, AGEMA 1999.)
10. Matteï, S., Tang-Kwor, E: *Emissivity measurements for Nextel Velvet coating 811-21 between –36°C AND 82°C.*
11. Lohrengel & Todtenhaupt (1996)
12. ITC Technical publication 32.
13. ITC Technical publication 29.
14. Schuster, Norbert and Kolobrodov, Valentin G. *Infrarotthermographie*. Berlin: Wiley-VCH, 2000.

Note The emissivity values in the table below are recorded using a shortwave (SW) camera. The values should be regarded as recommendations only and used with caution.

39.2 Tables

Table 39.1 T: Total spectrum; SW: 2–5 µm; LW: 8–14 µm, LLW: 6.5–20 µm; 1: Material; 2: Specification; 3: Temperature in °C; 4: Spectrum; 5: Emissivity: 6:Reference

1	2	3	4	5	6
3M type 35	Vinyl electrical tape (several colors)	< 80	LW	≈ 0.96	13
3M type 88	Black vinyl electrical tape	< 105	LW	≈ 0.96	13
3M type 88	Black vinyl electrical tape	< 105	MW	< 0.96	13
3M type Super 33 +	Black vinyl electrical tape	< 80	LW	≈ 0.96	13
Aluminum	anodized sheet	100	T	0.55	2

Table 39.1 T: Total spectrum; SW: 2–5 µm; LW: 8–14 µm, LLW: 6.5–20 µm; 1: Material; 2: Specification; 3: Temperature in °C; 4: Spectrum; 5: Emissivity: 6:Reference (continued)

1	2	3	4	5	6
Aluminum	anodized, black, dull	70	SW	0.67	9
Aluminum	anodized, black, dull	70	LW	0.95	9
Aluminum	anodized, light gray, dull	70	SW	0.61	9
Aluminum	anodized, light gray, dull	70	LW	0.97	9
Aluminum	as received, plate	100	T	0.09	4
Aluminum	as received, sheet	100	T	0.09	2
Aluminum	cast, blast cleaned	70	SW	0.47	9
Aluminum	cast, blast cleaned	70	LW	0.46	9
Aluminum	dipped in HNO_3, plate	100	T	0.05	4
Aluminum	foil	27	10 µm	0.04	3
Aluminum	foil	27	3 µm	0.09	3
Aluminum	oxidized, strongly	50–500	T	0.2–0.3	1
Aluminum	polished	50–100	T	0.04–0.06	1
Aluminum	polished plate	100	T	0.05	4
Aluminum	polished, sheet	100	T	0.05	2
Aluminum	rough surface	20–50	T	0.06–0.07	1
Aluminum	roughened	27	10 µm	0.18	3
Aluminum	roughened	27	3 µm	0.28	3
Aluminum	sheet, 4 samples differently scratched	70	SW	0.05–0.08	9
Aluminum	sheet, 4 samples differently scratched	70	LW	0.03–0.06	9
Aluminum	vacuum deposited	20	T	0.04	2
Aluminum	weathered, heavily	17	SW	0.83–0.94	5
Aluminum bronze		20	T	0.60	1
Aluminum hydroxide	powder		T	0.28	1
Aluminum oxide	activated, powder		T	0.46	1
Aluminum oxide	pure, powder (alumina)		T	0.16	1
Asbestos	board	20	T	0.96	1
Asbestos	fabric		T	0.78	1
Asbestos	floor tile	35	SW	0.94	7
Asbestos	paper	40–400	T	0.93–0.95	1

Table 39.1 T: Total spectrum; SW: 2–5 µm; LW: 8–14 µm, LLW: 6.5–20 µm; 1: Material; 2: Specification; 3: Temperature in °C; 4: Spectrum; 5: Emissivity: 6:Reference (continued)

1	2	3	4	5	6
Asbestos	powder		T	0.40–0.60	1
Asbestos	slate	20	T	0.96	1
Asphalt paving		4	LLW	0.967	8
Brass	dull, tarnished	20–350	T	0.22	1
Brass	oxidized	100	T	0.61	2
Brass	oxidized	70	SW	0.04–0.09	9
Brass	oxidized	70	LW	0.03–0.07	9
Brass	oxidized at 600°C	200–600	T	0.59–0.61	1
Brass	polished	200	T	0.03	1
Brass	polished, highly	100	T	0.03	2
Brass	rubbed with 80-grit emery	20	T	0.20	2
Brass	sheet, rolled	20	T	0.06	1
Brass	sheet, worked with emery	20	T	0.2	1
Brick	alumina	17	SW	0.68	5
Brick	common	17	SW	0.86–0.81	5
Brick	Dinas silica, glazed, rough	1100	T	0.85	1
Brick	Dinas silica, refractory	1000	T	0.66	1
Brick	Dinas silica, un-glazed, rough	1000	T	0.80	1
Brick	firebrick	17	SW	0.68	5
Brick	fireclay	1000	T	0.75	1
Brick	fireclay	1200	T	0.59	1
Brick	fireclay	20	T	0.85	1
Brick	masonry	35	SW	0.94	7
Brick	masonry, plastered	20	T	0.94	1
Brick	red, common	20	T	0.93	2
Brick	red, rough	20	T	0.88–0.93	1
Brick	refractory, corundum	1000	T	0.46	1
Brick	refractory, magnesite	1000–1300	T	0.38	1
Brick	refractory, strongly radiating	500–1000	T	0.8–0.9	1
Brick	refractory, weakly radiating	500–1000	T	0.65–0.75	1
Brick	silica, 95% SiO_2	1230	T	0.66	1
Brick	sillimanite, 33% SiO_2, 64% Al_2O_3	1500	T	0.29	1

Table 39.1 T: Total spectrum; SW: 2–5 µm; LW: 8–14 µm, LLW: 6.5–20 µm; 1: Material; 2: Specification; 3: Temperature in °C; 4: Spectrum; 5: Emissivity: 6:Reference (continued)

1	2	3	4	5	6
Brick	waterproof	17	SW	0.87	5
Bronze	phosphor bronze	70	SW	0.08	9
Bronze	phosphor bronze	70	LW	0.06	9
Bronze	polished	50	T	0.1	1
Bronze	porous, rough	50–150	T	0.55	1
Bronze	powder		T	0.76–0.80	1
Carbon	candle soot	20	T	0.95	2
Carbon	charcoal powder		T	0.96	1
Carbon	graphite powder		T	0.97	1
Carbon	graphite, filed surface	20	T	0.98	2
Carbon	lampblack	20–400	T	0.95–0.97	1
Chipboard	untreated	20	SW	0.90	6
Chromium	polished	50	T	0.10	1
Chromium	polished	500–1000	T	0.28–0.38	1
Clay	fired	70	T	0.91	1
Cloth	black	20	T	0.98	1
Concrete		20	T	0.92	2
Concrete	dry	36	SW	0.95	7
Concrete	rough	17	SW	0.97	5
Concrete	walkway	5	LLW	0.974	8
Copper	commercial, burnished	20	T	0.07	1
Copper	electrolytic, carefully polished	80	T	0.018	1
Copper	electrolytic, polished	–34	T	0.006	4
Copper	molten	1100–1300	T	0.13–0.15	1
Copper	oxidized	50	T	0.6–0.7	1
Copper	oxidized to blackness		T	0.88	1
Copper	oxidized, black	27	T	0.78	4
Copper	oxidized, heavily	20	T	0.78	2
Copper	polished	50–100	T	0.02	1
Copper	polished	100	T	0.03	2
Copper	polished, commercial	27	T	0.03	4
Copper	polished, mechanical	22	T	0.015	4
Copper	pure, carefully prepared surface	22	T	0.008	4
Copper	scraped	27	T	0.07	4

Table 39.1 T: Total spectrum; SW: 2–5 µm; LW: 8–14 µm, LLW: 6.5–20 µm; 1: Material; 2: Specification; 3: Temperature in °C; 4: Spectrum; 5: Emissivity: 6:Reference (continued)

1	2	3	4	5	6
Copper dioxide	powder		T	0.84	1
Copper oxide	red, powder		T	0.70	1
Ebonite			T	0.89	1
Emery	coarse	80	T	0.85	1
Enamel		20	T	0.9	1
Enamel	lacquer	20	T	0.85–0.95	1
Fiber board	hard, untreated	20	SW	0.85	6
Fiber board	masonite	70	SW	0.75	9
Fiber board	masonite	70	LW	0.88	9
Fiber board	particle board	70	SW	0.77	9
Fiber board	particle board	70	LW	0.89	9
Fiber board	porous, untreated	20	SW	0.85	6
Glass pane (float glass)	non-coated	20	LW	0.97	14
Gold	polished	130	T	0.018	1
Gold	polished, carefully	200–600	T	0.02–0.03	1
Gold	polished, highly	100	T	0.02	2
Granite	polished	20	LLW	0.849	8
Granite	rough	21	LLW	0.879	8
Granite	rough, 4 different samples	70	SW	0.95–0.97	9
Granite	rough, 4 different samples	70	LW	0.77–0.87	9
Gypsum		20	T	0.8–0.9	1
Ice: See Water					
Iron and steel	cold rolled	70	SW	0.20	9
Iron and steel	cold rolled	70	LW	0.09	9
Iron and steel	covered with red rust	20	T	0.61–0.85	1
Iron and steel	electrolytic	100	T	0.05	4
Iron and steel	electrolytic	22	T	0.05	4
Iron and steel	electrolytic	260	T	0.07	4
Iron and steel	electrolytic, carefully polished	175–225	T	0.05–0.06	1
Iron and steel	freshly worked with emery	20	T	0.24	1
Iron and steel	ground sheet	950–1100	T	0.55–0.61	1
Iron and steel	heavily rusted sheet	20	T	0.69	2
Iron and steel	hot rolled	130	T	0.60	1
Iron and steel	hot rolled	20	T	0.77	1
Iron and steel	oxidized	100	T	0.74	4

Table 39.1 T: Total spectrum; SW: 2–5 µm; LW: 8–14 µm, LLW: 6.5–20 µm; 1: Material; 2: Specification; 3: Temperature in °C; 4: Spectrum; 5: Emissivity: 6:Reference (continued)

1	2	3	4	5	6
Iron and steel	oxidized	100	T	0.74	1
Iron and steel	oxidized	1227	T	0.89	4
Iron and steel	oxidized	125–525	T	0.78–0.82	1
Iron and steel	oxidized	200	T	0.79	2
Iron and steel	oxidized	200–600	T	0.80	1
Iron and steel	oxidized strongly	50	T	0.88	1
Iron and steel	oxidized strongly	500	T	0.98	1
Iron and steel	polished	100	T	0.07	2
Iron and steel	polished	400–1000	T	0.14–0.38	1
Iron and steel	polished sheet	750–1050	T	0.52–0.56	1
Iron and steel	rolled sheet	50	T	0.56	1
Iron and steel	rolled, freshly	20	T	0.24	1
Iron and steel	rough, plane surface	50	T	0.95–0.98	1
Iron and steel	rusted red, sheet	22	T	0.69	4
Iron and steel	rusted, heavily	17	SW	0.96	5
Iron and steel	rusty, red	20	T	0.69	1
Iron and steel	shiny oxide layer, sheet,	20	T	0.82	1
Iron and steel	shiny, etched	150	T	0.16	1
Iron and steel	wrought, carefully polished	40–250	T	0.28	1
Iron galvanized	heavily oxidized	70	SW	0.64	9
Iron galvanized	heavily oxidized	70	LW	0.85	9
Iron galvanized	sheet	92	T	0.07	4
Iron galvanized	sheet, burnished	30	T	0.23	1
Iron galvanized	sheet, oxidized	20	T	0.28	1
Iron tinned	sheet	24	T	0.064	4
Iron, cast	casting	50	T	0.81	1
Iron, cast	ingots	1000	T	0.95	1
Iron, cast	liquid	1300	T	0.28	1
Iron, cast	machined	800–1000	T	0.60–0.70	1
Iron, cast	oxidized	100	T	0.64	2
Iron, cast	oxidized	260	T	0.66	4
Iron, cast	oxidized	38	T	0.63	4
Iron, cast	oxidized	538	T	0.76	4
Iron, cast	oxidized at 600°C	200–600	T	0.64–0.78	1
Iron, cast	polished	200	T	0.21	1
Iron, cast	polished	38	T	0.21	4
Iron, cast	polished	40	T	0.21	2

Table 39.1 T: Total spectrum; SW: 2–5 µm; LW: 8–14 µm, LLW: 6.5–20 µm; 1: Material; 2: Specification; 3: Temperature in °C; 4: Spectrum; 5: Emissivity: 6:Reference (continued)

1	2	3	4	5	6
Iron, cast	unworked	900–1100	T	0.87–0.95	1
Krylon Ultra-flat black 1602	Flat black	Room tempera-ture up to 175	LW	≈ 0.96	12
Krylon Ultra-flat black 1602	Flat black	Room tempera-ture up to 175	MW	≈ 0.97	12
Lacquer	3 colors sprayed on Aluminum	70	SW	0.50–0.53	9
Lacquer	3 colors sprayed on Aluminum	70	LW	0.92–0.94	9
Lacquer	Aluminum on rough surface	20	T	0.4	1
Lacquer	bakelite	80	T	0.83	1
Lacquer	black, dull	40–100	T	0.96–0.98	1
Lacquer	black, matte	100	T	0.97	2
Lacquer	black, shiny, sprayed on iron	20	T	0.87	1
Lacquer	heat–resistant	100	T	0.92	1
Lacquer	white	100	T	0.92	2
Lacquer	white	40–100	T	0.8–0.95	1
Lead	oxidized at 200°C	200	T	0.63	1
Lead	oxidized, gray	20	T	0.28	1
Lead	oxidized, gray	22	T	0.28	4
Lead	shiny	250	T	0.08	1
Lead	unoxidized, polished	100	T	0.05	4
Lead red		100	T	0.93	4
Lead red, powder		100	T	0.93	1
Leather	tanned		T	0.75–0.80	1
Lime			T	0.3–0.4	1
Magnesium		22	T	0.07	4
Magnesium		260	T	0.13	4
Magnesium		538	T	0.18	4
Magnesium	polished	20	T	0.07	2
Magnesium powder			T	0.86	1
Molybdenum		1500–2200	T	0.19–0.26	1
Molybdenum		600–1000	T	0.08–0.13	1
Molybdenum	filament	700–2500	T	0.1–0.3	1
Mortar		17	SW	0.87	5
Mortar	dry	36	SW	0.94	7
Nextel Velvet 811-21 Black	Flat black	–60–150	LW	> 0.97	10 and 11

Table 39.1 T: Total spectrum; SW: 2–5 µm; LW: 8–14 µm, LLW: 6.5–20 µm; 1: Material; 2: Specification; 3: Temperature in °C; 4: Spectrum; 5: Emissivity: 6:Reference (continued)

1	2	3	4	5	6
Nichrome	rolled	700	T	0.25	1
Nichrome	sandblasted	700	T	0.70	1
Nichrome	wire, clean	50	T	0.65	1
Nichrome	wire, clean	500–1000	T	0.71–0.79	1
Nichrome	wire, oxidized	50–500	T	0.95–0.98	1
Nickel	bright matte	122	T	0.041	4
Nickel	commercially pure, polished	100	T	0.045	1
Nickel	commercially pure, polished	200–400	T	0.07–0.09	1
Nickel	electrolytic	22	T	0.04	4
Nickel	electrolytic	260	T	0.07	4
Nickel	electrolytic	38	T	0.06	4
Nickel	electrolytic	538	T	0.10	4
Nickel	electroplated on iron, polished	22	T	0.045	4
Nickel	electroplated on iron, unpolished	20	T	0.11–0.40	1
Nickel	electroplated on iron, unpolished	22	T	0.11	4
Nickel	electroplated, polished	20	T	0.05	2
Nickel	oxidized	1227	T	0.85	4
Nickel	oxidized	200	T	0.37	2
Nickel	oxidized	227	T	0.37	4
Nickel	oxidized at 600°C	200–600	T	0.37–0.48	1
Nickel	polished	122	T	0.045	4
Nickel	wire	200–1000	T	0.1–0.2	1
Nickel oxide		1000–1250	T	0.75–0.86	1
Nickel oxide		500–650	T	0.52–0.59	1
Oil, lubricating	0.025 mm film	20	T	0.27	2
Oil, lubricating	0.050 mm film	20	T	0.46	2
Oil, lubricating	0.125 mm film	20	T	0.72	2
Oil, lubricating	film on Ni base: Ni base only	20	T	0.05	2
Oil, lubricating	thick coating	20	T	0.82	2
Paint	8 different colors and qualities	70	SW	0.88–0.96	9
Paint	8 different colors and qualities	70	LW	0.92–0.94	9
Paint	Aluminum, various ages	50–100	T	0.27–0.67	1
Paint	cadmium yellow		T	0.28–0.33	1

Table 39.1 T: Total spectrum; SW: 2–5 µm; LW: 8–14 µm, LLW: 6.5–20 µm; 1: Material; 2: Specification; 3: Temperature in °C; 4: Spectrum; 5: Emissivity: 6:Reference (continued)

1	2	3	4	5	6
Paint	chrome green		T	0.65–0.70	1
Paint	cobalt blue		T	0.7–0.8	1
Paint	oil	17	SW	0.87	5
Paint	oil based, average of 16 colors	100	T	0.94	2
Paint	oil, black flat	20	SW	0.94	6
Paint	oil, black gloss	20	SW	0.92	6
Paint	oil, gray flat	20	SW	0.97	6
Paint	oil, gray gloss	20	SW	0.96	6
Paint	oil, various colors	100	T	0.92–0.96	1
Paint	plastic, black	20	SW	0.95	6
Paint	plastic, white	20	SW	0.84	6
Paper	4 different colors	70	SW	0.68–0.74	9
Paper	4 different colors	70	LW	0.92–0.94	9
Paper	black		T	0.90	1
Paper	black, dull		T	0.94	1
Paper	black, dull	70	SW	0.86	9
Paper	black, dull	70	LW	0.89	9
Paper	blue, dark		T	0.84	1
Paper	coated with black lacquer		T	0.93	1
Paper	green		T	0.85	1
Paper	red		T	0.76	1
Paper	white	20	T	0.7–0.9	1
Paper	white bond	20	T	0.93	2
Paper	white, 3 different glosses	70	SW	0.76–0.78	9
Paper	white, 3 different glosses	70	LW	0.88–0.90	9
Paper	yellow		T	0.72	1
Plaster		17	SW	0.86	5
Plaster	plasterboard, untreated	20	SW	0.90	6
Plaster	rough coat	20	T	0.91	2
Plastic	glass fibre laminate (printed circ. board)	70	SW	0.94	9
Plastic	glass fibre laminate (printed circ. board)	70	LW	0.91	9
Plastic	polyurethane isolation board	70	LW	0.55	9

Table 39.1 T: Total spectrum; SW: 2–5 µm; LW: 8–14 µm, LLW: 6.5–20 µm; 1: Material; 2: Specification; 3: Temperature in °C; 4: Spectrum; 5: Emissivity: 6:Reference (continued)

1	2	3	4	5	6
Plastic	polyurethane iso-lation board	70	SW	0.29	9
Plastic	PVC, plastic floor, dull, structured	70	SW	0.94	9
Plastic	PVC, plastic floor, dull, structured	70	LW	0.93	9
Platinum		100	T	0.05	4
Platinum		1000–1500	T	0.14–0.18	1
Platinum		1094	T	0.18	4
Platinum		17	T	0.016	4
Platinum		22	T	0.03	4
Platinum		260	T	0.06	4
Platinum		538	T	0.10	4
Platinum	pure, polished	200–600	T	0.05–0.10	1
Platinum	ribbon	900–1100	T	0.12–0.17	1
Platinum	wire	1400	T	0.18	1
Platinum	wire	500–1000	T	0.10–0.16	1
Platinum	wire	50–200	T	0.06–0.07	1
Porcelain	glazed	20	T	0.92	1
Porcelain	white, shiny		T	0.70–0.75	1
Rubber	hard	20	T	0.95	1
Rubber	soft, gray, rough	20	T	0.95	1
Sand			T	0.60	1
Sand		20	T	0.90	2
Sandstone	polished	19	LLW	0.909	8
Sandstone	rough	19	LLW	0.935	8
Silver	polished	100	T	0.03	2
Silver	pure, polished	200–600	T	0.02–0.03	1
Skin	human	32	T	0.98	2
Slag	boiler	0–100	T	0.97–0.93	1
Slag	boiler	1400–1800	T	0.69–0.67	1
Slag	boiler	200–500	T	0.89–0.78	1
Slag	boiler	600–1200	T	0.76–0.70	1
Snow: See Water					
Soil	dry	20	T	0.92	2
Soil	saturated with water	20	T	0.95	2
Stainless steel	alloy, 8% Ni, 18% Cr	500	T	0.35	1
Stainless steel	rolled	700	T	0.45	1
Stainless steel	sandblasted	700	T	0.70	1
Stainless steel	sheet, polished	70	SW	0.18	9

Table 39.1 T: Total spectrum; SW: 2–5 µm; LW: 8–14 µm, LLW: 6.5–20 µm; 1: Material; 2: Specification; 3: Temperature in °C; 4: Spectrum; 5: Emissivity: 6:Reference (continued)

1	2	3	4	5	6
Stainless steel	sheet, polished	70	LW	0.14	9
Stainless steel	sheet, untreated, somewhat scratched	70	SW	0.30	9
Stainless steel	sheet, untreated, somewhat scratched	70	LW	0.28	9
Stainless steel	type 18-8, buffed	20	T	0.16	2
Stainless steel	type 18-8, oxi-dized at 800°C	60	T	0.85	2
Stucco	rough, lime	10–90	T	0.91	1
Styrofoam	insulation	37	SW	0.60	7
Tar			T	0.79–0.84	1
Tar	paper	20	T	0.91–0.93	1
Tile	glazed	17	SW	0.94	5
Tin	burnished	20–50	T	0.04–0.06	1
Tin	tin–plated sheet iron	100	T	0.07	2
Titanium	oxidized at 540°C	1000	T	0.60	1
Titanium	oxidized at 540°C	200	T	0.40	1
Titanium	oxidized at 540°C	500	T	0.50	1
Titanium	polished	1000	T	0.36	1
Titanium	polished	200	T	0.15	1
Titanium	polished	500	T	0.20	1
Tungsten		1500–2200	T	0.24–0.31	1
Tungsten		200	T	0.05	1
Tungsten		600–1000	T	0.1–0.16	1
Tungsten	filament	3300	T	0.39	1
Varnish	flat	20	SW	0.93	6
Varnish	on oak parquet floor	70	SW	0.90	9
Varnish	on oak parquet floor	70	LW	0.90–0.93	9
Wallpaper	slight pattern, light gray	20	SW	0.85	6
Wallpaper	slight pattern, red	20	SW	0.90	6
Water	distilled	20	T	0.96	2
Water	frost crystals	–10	T	0.98	2
Water	ice, covered with heavy frost	0	T	0.98	1
Water	ice, smooth	0	T	0.97	1
Water	ice, smooth	–10	T	0.96	2
Water	layer >0.1 mm thick	0–100	T	0.95–0.98	1

Table 39.1 T: Total spectrum; SW: 2–5 µm; LW: 8–14 µm, LLW: 6.5–20 µm; 1: Material; 2: Specification; 3: Temperature in °C; 4: Spectrum; 5: Emissivity: 6:Reference (continued)

1	2	3	4	5	6
Water	snow		T	0.8	1
Water	snow	–10	T	0.85	2
Wood		17	SW	0.98	5
Wood		19	LLW	0.962	8
Wood	ground		T	0.5–0.7	1
Wood	pine, 4 different samples	70	SW	0.67–0.75	9
Wood	pine, 4 different samples	70	LW	0.81–0.89	9
Wood	planed	20	T	0.8–0.9	1
Wood	planed oak	20	T	0.90	2
Wood	planed oak	70	SW	0.77	9
Wood	planed oak	70	LW	0.88	9
Wood	plywood, smooth, dry	36	SW	0.82	7
Wood	plywood, untreated	20	SW	0.83	6
Wood	white, damp	20	T	0.7–0.8	1
Zinc	oxidized at 400°C	400	T	0.11	1
Zinc	oxidized surface	1000–1200	T	0.50–0.60	1
Zinc	polished	200–300	T	0.04–0.05	1
Zinc	sheet	50	T	0.20	1

A note on the technical production of this publication

This publication was produced using XML — the eXtensible Markup Language. For more information about XML, please visit http://www.w3.org/XML/

A note on the typeface used in this publication

This publication was typeset using Linotype Helvetica™ World. Helvetica™ was designed by Max Miedinger (1910–1980)

LOEF (List Of Effective Files)

T501404.xml; en-US; AA; 55448; 2019-02-12
T505552.xml; en-US; 55184
T505469.xml; en-US; 55301
T505013.xml; en-US; 53350
T506130.xml; en-US; 55019
T506212.xml; ; 52552
T506156.xml; en-US; 54521
T506141.xml; en-US; 55038
T506142.xml; en-US; 42495
T506143.xml; en-US; 55028
T506144.xml; en-US; 47433
T506145.xml; en-US; 55019
T506146.xml; en-US; 55007
T506147.xml; en-US; 45101
T506148.xml; en-US; 47433
T506149.xml; en-US; 47433
T506150.xml; en-US; 45139
T506151.xml; en-US; 45104
T506152.xml; en-US; 45104
T506153.xml; en-US; 45104
T506154.xml; en-US; 55039
T505476.xml; en-US; 52849
T505012.xml; en-US; 41563
T505007.xml; en-US; 42810
T506125.xml; en-US; 40753
T505000.xml; en-US; 40333
T506155.xml; en-US; 42220
T506051.xml; en-US; 40460
T505005.xml; en-US; 43349
T505001.xml; en-US; 41563
T505006.xml; en-US; 41563
T505002.xml; en-US; 39512

Website
http://www.flir.com

Customer support
http://support.flir.com

Copyright
© 2019, FLIR Systems, Inc. All rights reserved worldwide.

Disclaimer
Specifications subject to change without further notice. Models and accessories subject to regional market considerations. License procedures may apply. Products described herein may be subject to US Export Regulations. Please refer to exportquestions@flir.com with any questions.

Publ. No.: T810413
Release: AA
Commit: 55452
Head: 55452
Language: en-US
Modified: 2019-02-12
Formatted: 2019-02-12